INSTALLATION, COMMISSIONING & CHECK MANUAL

NEWLIFT
NEUE ELEKTRONISCHE WEGE

FST-3

Lift control module, safety module and safety system

Manufacturer	NEW *LIFT* Neue elektronische Wege Steuerungsbau GmbH Lochhamer Schlag 8 82166 Gräfelfing Phone +49 89 – 898 66 – 0 Fax +49 89 – 898 66 – 300 E-mail info@newlift.de www.newlift.de
Service line	Phone +49 89 – 898 66 – 110 E-mail service@newlift.de

First edition	23.05.2023
Author	AL/AME
Last change	22.11.2023 / DOS
Release	22.11.2023 / AL
Hardware version	S2: V1.02 / FST-3: V1.1
S2 software version	V2.200-0022
FST software version	V180
Software signature S2	0x67EC4006
Document number	S2.28
Document version	MIPA_FST-3_2023-11_EN

Inhalt

1 About this manual

Please read this manual carefully before installing and commissioning the FST-3 controller. The safety regulations must be observed throughout (*see 2.1 Safety regulations, page 11)*. Operation of the FST-3 controller is briefly explained in Chapter *see 7 User interface of FST-3 controller, page 33*.

1.1 General

This manual will help you during installation and commissioning of the FST-3 controller and its components.

The installation, commissioning and maintenance manual contains important information for safe and proper installation and commissioning of the FST-3 controller.

Following these instructions will help to:

› prevent danger,
› avoid repair costs and downtime,
› increase the reliability and lifespan of the FST-3 controller and of the lift system.

Local, national and on-site regulations regarding health and safety and protection of the environment must be taken into account in addition to this installation and commissioning manual.

This manual only describes the assemblies of the lift system delivered by NEW *LIFT*. For information about components of the lift system that were not manufactured and supplied by NEW *LIFT*, please refer to the respective user information supplied by the manufacturer or supplier.

1.2 Abbreviations, characters and symbols used

Symbol / abbreviation	Meaning
▯	**Delivery condition** Settings that are supplied as standard are marked with an asterisk ✶.
⛔	**System stop** Marks settings requiring a system stop in case a change becomes necessary. The FST controller displays the text `Lift must be stopped to change the value. OK?` If you wish to change the value, confirm with `YES`, if you do not wish to change the value or wish to change it later, then confirm with `NO`.
°	**Re-start** Marks settings that only become active after a re-start of the FST-3 or of the components.
▶	**Operational instructions** Perform the tasks that follow this symbol in the specified order.
+	**Key combination:** Press the linked keys simultaneously.
P	Power
I	Input
O	Output
L	low active

H	high active
⚠	***Safety-relevant information*** This symbol is located in front of safety-relevant information.
ⓘ	***Information notice*** This symbol is located in front of relevant information.
Ⓟ	***This symbol alerts you to a configuration-dependent test step.***

1.3 Notation

Notation	Meaning
Bold	› Designations of switches and actuators › Input values
Italics	› Captions › Cross references › Designations of functions and signals › Product names
Bold italics	› Remarks
LCD font	› System messages of the controller

1.4 Further information

The following documents, among others, are available for the FST-3 controller and its components:

› LIMAX33RED operating instructions
› ADM manual
› EAZ TFT.45.110.210 manual
› EAZ-256 manual
› EN81-20 manual
› FPM manual
› FST-3 manual
› Update backup analysis manual
› GST-XT manual
› LCS manual
› RIO manual
› SAM manual

These and other current manuals can be found in the download area of our website at https://www.newlift.de/downloads.html

1.5 How to contact us

If, after referring to this manual, you still require assistance, our service line is there for you:

Phone +49 89 – 898 66 – 110
E-mail service@newlift.de

Mon. - Thurs.: 8:00 a.m. – 12:00 p.m. and 1:00 p.m. – 5:00 p.m.
Fr: 8:00 a.m. – 3:00 p.m.

2 Safety

2.1 Safety regulations

All important safety regulations are summarised in this chapter. These safety instructions must always be adhered to during all work on the installation.

All persons performing installation, commissioning, maintenance as well as repair work on the FST-3 (S2) safety system must always read this chapter, among others, and implement the requirements specified therein.

2.1.1 Qualifications of the lift engineer

The lift engineer must:

› be over 18 years of age (exception: apprentices who are over 16 years of age and are permanently supervised by an engineer qualified for training apprentices).

› have first aid training,

› have theoretical and practical knowledge of regulations and measures for the prevention of fire and explosions in his work area,

› be able to identify, avoid and rectify all dangers that might occur during his work in the shaft and in the operating rooms,

› be able to identify and rectify all irregularities and faults that might occur during installation and operation of a lift system,

› have theoretical and practical knowledge of operating principles and requirements of electric controls and drive systems.

All installation and commissioning work on electric and electronic components of the FST-3 controller must be performed by or supervised by a qualified electrician.

A qualified electrician has appropriate training and knowledge of regulations that allow him to judge the quality of the work performed and identify possible dangers (DGUV regulation 3).

2.2 Residual dangers and protective measures

Danger for persons

The following shall always apply during all work on the installation:

Danger to life! Do not touch live parts while working on electrical equipment.

► Before starting work, make sure the system is off circuit.

► Only carry out any installation work on electrical components when these are switched off and in an unpowered state.

► Only use insulated tools when working on electrical system components.

Risk of injury when lifting or moving the control cabinet if it falls down or tips over.

► Only transport and lift the control cabinet with suitable equipment (lift truck, hoisting gear etc.).

► All workers must be trained in using these aids and must observe all applicable special regulations to avoid accidents.

Falling parts or parts protruding into the shaft. Risk of serious injury or death.

► Block the shaft access points.

► Before beginning installation work, remove all foreign parts and assembly aids that are not required from the shaft.

Electrical hazard, leaking gas or water due to pierced supply lines. Risk of serious injury or death.

► Make sure no supply lines are in the installation location before starting any installation work.

Danger of falling! Lift engineers and unauthorised persons can fall down the shaft. Risk of serious injury or death.

► Block the shaft access points.
► Use suitable protection (e.g. safety harnesses, scaffoldings) when working on or in the shaft.

Danger of crushing due to intentional or accidental car movement. Risk of serious injury or death.

► Block the shaft access points.
► Before starting any work, make sure that there are no persons in the shaft or in the vicinity of moving parts of the drive.
► Prevent unauthorised operation of the controller.

Risk of material damage

The following shall always apply during all work on the installation:

Electrostatic charging

► Keep the electronic assembly in its original packaging until installation.
► Before opening the original packaging, a static discharge must be performed. To do this, touch a grounded piece of metal.
► During work on electronic assemblies, periodically perform this discharge procedure.

Electronic assemblies are destroyed by defective, interchanged or incorrectly mounted connectors, short-circuiting or excess voltage.

► Check plugs for mechanical damage.
► Never change pre-assembled connectors or cables.
► Only connect loose or torn off wires according to wiring diagram details if this is possible on site (suitable material and tools must be available).
► Pay attention to coding pins and latch lugs.

Failure of the safety functions!
Sources of interference in the operational environment can lead to a failure of the FST-3 safety system.

► Do not use the *FST-3* safety system in explosive or corrosive environments.
► Do not install the system near sources of interference exhibiting strong inductive or capacitive interference or electrostatic fields.

Dangerous electrical voltage!
When installing the FST-3 in the control cabinet, live parts may be touched.

► All work on the electrics may only be performed by a qualified electrician.
► Disconnect the system and all components from the voltage supply before commencing with installation or wiring work.
► Provide fine-wire cables and stranded wires with ferrules.
► Check all sockets, terminals and plug connections prior to switching on.

Danger of falling! Risk of serious injury or death!
Until commissioning is complete, conventional safety precautions are wholly or partially out of operation.

► Define suitable contingency measures during project planning.
► Make sure that these contingency measures are available and installed until commissioning on site.
► Never configure the system via remote access – only on site.
► Be aware of the active/inactive safety functions at all times during commissioning.
► Check safety-related parameters are working properly each time after configuration is performed or changes are made.

► Document all commissioning steps and every subsequent change to the system.

► Check all new or modified settings for plausibility through the FST-3 safety system.

Danger of falling! Risk of serious injury or death!
In installation mode, the position-dependent safety functions – especially the safety function for monitoring speed and acceleration – are out of operation until either one of the four end switches has been taught or the tape switch has been connected.

► Be aware of the active/inactive safety functions at all times during commissioning.

► On completion of installation work, deactivate installation mode.

2.3 Basic safety principles

During commissioning, the installation of the FST-3 safety system represents a high risk for the lift engineer, because the system can only offer a low level of safety in principle. In particular, the monitoring of the nominal speed (safety brake during Over- speed) is not available. During the first steps of commissioning, the lift engineer bears a lot of responsibility, especially for his/her own safety:

Installation mode safety risk:

› In installation mode, the position-dependent safety functions are out of operation until either one of the four end switches has been taught or the tape switch is connected.

› In installation mode, end switches that have not been taught are not active.

Consequently, it is ensured that the lift engineer can first move the car for the purpose of tape installation in the shaft and subsequently, during the teaching of the end switches, enjoys the greatest possible safety that the system can offer.

Installation and teach mode differentiation:

Installation mode of the FST-3 safety system can be activated or deactivated in combination with a certain parameter activity in a time-limited confirmation action by means of the auxiliary mode control. Installation mode must only be accessible to one lift engineer who is aware of his/her responsibility and is able to correctly assess risk and, where necessary, take contingency measures. In installation mode, the car can only be moved using the auxiliary mode and inspection control.

Teach mode of the *FST*-3 safety system can also be activated or deactivated in combination with a certain parameter activity in a time-limited confirmation action by means of the auxiliary mode control. It is much less critical than installation mode. All safety functions are in operation. Only the floor positions and the door zone length can be modified. After activating the teach mode, normal operation of the lift by passengers is prevented by the FST (landing calls are blocked). The car can be moved using the auxiliary mode and inspection control or by car calls.

The following basic safety principles apply throughout the entire commissioning phase:

› The lift engineer must know which safety functions are active at every point in time during commissioning. Consequently, the installing engineer can assess whether additional measures are necessary.

› Safety-related parameters must be tested following configuration or modification before safety can be guaranteed.

› All commissioning steps and every subsequent change must be documented by the lift engineer. An appropriate template is printed in the user documentation.

› The system must not be configured via remote access (EN81-50, B.1, no. 7). In other words, the lift engineer must be on site to perform configuration changes.

› All changed settings must be checked by the FST-3 safety system for plausibility before becoming active.

General

› The instructions of the lift manufacturer and the instructions in this manual must be followed during installation and commissioning of the lift system.

› The shaft must be secured against unauthorised trespassing during installation and commissioning.

- Assemblies, devices and cables must be installed and fastened securely and permanently.
- Loads must be moved with suitable aids (lift trucks, hoisting gear etc.).
- Sharp and pointed tools or other potentially dangerous objects may only be carried along in clothing if suitable protective measures have been taken to rule out any danger.
- Alcohol and drugs must not be consumed before and during installation and commissioning.

Documentation

- A copy of the installation and commissioning manual must be available to the lift engineer at the time of installing and commissioning the *FST-3* safety system and its components.
- A copy of the installation and commissioning manual and the wiring diagrams must be kept in the control cabinet at all times after installation.
- The supplied wiring diagrams of the *FST-3* safety system are binding. Changes must only be made after consulting NEW LIFT and must be documented in writing on the system.
- The factory test logs of the *FST-3* safety system remain with NEW LIFT.

Electricity

- Regulations for installing and operating electrical equipment (VDE 0100) and regulations of local utilities must be followed.
- The specified distances between different electrical assemblies must be controlled and maintained.
- All installation work must be carried out with the system shut down and off circuit.
- All cables and wires must be installed with sufficient strain relief.
- The neutral wire and earth wire must be routed separately.
- The control cabinet must be supplied with a clockwise rotary field.

Working in the shaft

- Any work in the shaft requires perfect and permanent communication between the supervisor on the *FST-3* safety system in the motor room and the workers in the shaft.
- Components in the shaft must be arranged or secured in such a way that persons accessing the shaft for inspection, maintenance or repair purposes are not in danger.
- The maximum load of the lift system must not be exceeded.
- The specified overruns of the emergency end switches in relation to the speed must be observed.
- The emergency installations must not be activated during normal operation.
- All emergency installations and braking systems must be checked for troublefree operation and all shaft entrances closed off before beginning work.
- Installation and operation are prohibited if other persons could be in danger.
- Workers must be secured against falling.
- In case of any work interruptions, the car must be moved to the lowest stop position, the controller switched off and the power supply (e.g. UPS) permanently disconnected.

Personal safety equipment of the lift engineer

- Eye protection
- Safety boots
- Protective helmet
- Safety harness
- Clothing suitable to the ambient conditions of the installation location
- Jewellery, watches and similar items may not be worn; a hair net must be used if applicable.

Handling electronic assemblies

- Leave electronic assemblies in their original packaging until installation.
- Touch a grounded piece of metal prior to opening the original packaging to prevent damage from static

charges.

› All bus inputs and outputs not in use must be equipped with a terminal resistor (terminator).

Waste disposal

› All packaging material must be disposed of in an environmentally acceptable manner; paper, plastic, metal, electronic assemblies etc. must be recycled

3 Safety functions

The S2 safety system may only be operated with an FST-3 lift controller from NEW *Lift* Neue elektronische Wege Steuerungsbau GmbH. This is sometimes referred to in this document as FST.

3.1 Overview of the safety functions

The S2 safety system can be used for the following functions:

No.	Inputs	Safety function	Standard	Actuator	SIL	FST fault reset / test menu*	S2 reset *	SG reset / S256*	SK reset / 256*	No reset required*
1	VTrip position (EEPROM)	Overspeed speed (pre-triggering)	EN 81-20, 5.6.2.2.1.6 a)	SHK	2					X
2	VTrip position (EEPROM)	Overspeed speed speed limiter	EN81-20, 5.6.2.2.1.1 a)	SBR SHK	3		1	2	2	
3	Position shaft image	Deceleration control circuit for shortened buffer stroke	EN 81-20, 5.12.1.3	SHK	3		1	2	2	
4	Position shaft image	Emergency end switch	EN 81-20, 5.12.2.3.1 b)	SHK	1	X				
5	Position shaft image inspection signal bypass request	Door bypass	EN 81-20, 5.12.1.4 a)	DOOR	2	n/a	n/a	n/a	n/a	n/a
6	Inspection signal/ direction signals position shaft image	Inspection end switch	EN 81-21, 5.5.3.4 EN 81-21, 5.7.3.4	SHK	2	n/a	n/a	n/a	n/a	n/a
7	SHK door position shaft image	Unintended movement with opened doors	EN 81-20, 5.6.7.7 EN 81-20, 5.6.7.8	SBR or[1] SHK	2		1	2	2	
8	Car shaft access, pit shaft access	Access door monitoring, car roof, shaft pit	EN81-21, 5.5.3.1 EN81-21, 5.7.3.1	SHK	3			1	1	
9	Access reset, car shaft access, pit shaft access, inspection, SHK end	Resetting the access door monitoring	EN81-21, 5.5.3.2 EN81-21, 5.7.3.2	SHK SBR	2			1	1	
10	Position shaft image	Pre-triggered stopping system, shaft head and shaft pit	EN 81-21: 5.5.2.3.1 EN 81-21: 5.7.2.3.1	SHK SBR	3	n/a	1	2	2	n/a
11	SHK end position	Loss of traction (car does not brake or moves with SHK open)	No standard reference	SHK SBR	1		1	2	2	

No.	Inputs	Safety function	Standard	Actuator	SIL	FST fault reset / test menu*	S2 reset *	SG reset / S256*	SK reset / 256*	No reset required*
12	Bypass, inspection signal, auxiliary mode signal	Prevention of normal operation during bypass	EN81-20, 5.12.1.8.3 f)	SHK	3					X
13	Inspection signal	Inspection switch	EN81-20, 5.12.1.5.1.2 a)	SHK	3	n/a	n/a	n/a	n/a	n/a
14	Inspection signal, direction signals position	Monitoring the inspection buttons	EN81-20, 5.12.1.5.2.3 b)	SHK	1	n/a	1	2	2	n/a
15	Auxiliary mode signal, inspection signal	Auxiliary mode switch	EN81-20, 5.12.1.6.1	SHK AUX	3	n/a	1	2	2	n/a
16	Position of the folding supports	Mechanical equipment (folding supports)	EN 81-20: 5.2.6.4.3.1 b) EN 81-20: 5.2.6.4.4.1 e), f) EN 81-21: 5.5.2.6 EN 81-21: 5.7.2.6	SHK	3	n/a	n/a	n/a	n/a	n/a
17	Position of the folding supports, shaft access	Temporary protected space	EN81-21, 5.5.2.5.3 EN81-21, 5.7.2.5.3 EN81-20: no standard reference	SBR	1	n/a	n/a	n/a	n/a	n/a
18	Position	Acceleration monitoring (6m/s2)	No standard reference	SHK SBR	2		1	2	2	
19	Position inspection signal	Monitoring of inspection and auxiliary speed (0.63 m/s or 0.3 m/s)	EN81-20, 5.12.1.5.2.1 e) EN81-20, 5.12.1.6.1 f)	SHK	3					X
20	Installation mode inspection signals, FK/SG auxiliary mode signal	Installation mode preventing normal operation	No standard reference	SHK	3	n/a	n/a	n/a	n/a	n/a

* In the RESET columns, the numbers 1 and 2 refer to the sequence in which the reset is performed:
First S2 reset, then SG and SK.

[1)]The actuator can be triggered either through the SHK or the SBR relay.
If the lift brake is being used as an actuator, the monitoring must be performed externally, as per EN81-20, 5.6.7.8.

No valid shaft image available

If no valid shaft image is available, all the safety functions dependent upon it are in a safe state. I.e. the shaft end switches are open, for example. In this state, the car can only be moved by means of the auxiliary mode or inspection control in installation operation.

3.1.1 Overspeed (pre-triggering)

The trigger speed of the system is read from the EEPROM data. That is the shutdown speed for the safety brake. The electrical shutdown is at 92% of the mechanical (configured) trigger speed. This equates to a ratio of 115% / 125%.

The current speed is determined using the position values and compared with the electrical shutdown speed. If the speed exceeds the calculated shutdown speed, an emergency-stop signal is initially sent to the control system (with a short debounce constant) and the SHK is opened slightly later.

The emergency-stop signal to the *FST* is not relevant to safety and is used to prevent the shutting down of the system due to excess speed where possible.

This function is not locking, i.e. the SHK is closed again after a system stop and an appropriate waiting period.

Component	V_{Nom} (m/s)	V_{Trip} min.	V_{Tr} max. (m/s) (as per standard)	V_{Nom} * 125% (m/s)
Blocking safety gear (except roller blocking safety gear)	0 – 0.63	1.15 V_{Nom}	0.8	Max. 0.79
Roller blocking safety gear	0 – 0.63	1.15 V_{Nom}	1.0	Max. 0.79
Progressive safety gear	0 – 1.0	1.15 V_{Nom}	1.5	Max. 1.25
Progressive safety gear	> 1.0	1.15 V_{Nom}	1.25 V_{Nom} + 0.25/V_{Nom}	1.25 V_{Nom}

3.1.2 Overspeed (speed limiter)

S2 can be used as a speed limiter. Various systems, such as electrical safety brakes, are possible as actuators that engage the safety gear. The connected actuator system does not form part of the S2 safety system.

The trigger speed of the system is read from the EEPROM data. The current speed is determined using the position values and compared with the trigger speed. If the current speed exceeds the trigger speed, the SHK and SBR are opened.

This function is locking, i.e. the state is saved in EEPROM (power-cycle-protected) and a qualified person is required on site to put the lift back into operation.

3.1.3 Deceleration control circuit

The deceleration control circuit checks whether the normal deceleration is active prior to approaching the end floors with a shortened buffer stroke in normal operation and opens the safety circuit in the event of an error (see EN81-20, 5.8.2.2.2).

A velocity curve is calculated as a function of the distance to the previous floor. If this curve is exceeded (braking distance too short), the safety function opens the safety circuit (SHK relay).

The maximum deceleration of the control system can be configured in installation mode when commissioning the system.

3.1.4 Emergency end switch

The positions of the emergency end switches are defined during teaching in installation mode and permanently saved to the S2. They must be active between the respective end floors and prior to contacting the end stops (e.g. buffers). The position can be adjusted within these limits in installation mode.

This function is not locking, i.e. when the car leaves the emergency end switch area, the safety circuit is closed again.

Any locks (resetting by operating personnel) and return functions that might be necessary (see EN81-20, 5.12.2.3) have been implemented in the FST.

Additional mechanical emergency end switches at the end points of the hydraulic piston are necessary for indirect hydraulic lifts. These switches must conventionally be wired in the safety circuit and are not

part of this project.

3.1.5 Door bypass

Inside the door zones, the doors can be bypassed for the purpose of approaching (with open doors), relevelling and for quick starts. S2 activates the door bypass under the following conditions (EN81-20, 5.12.1.4):

› The door bypass can only be activated in normal operation (not during inspection or auxiliary mode or when bypass is active).

› The *FST* has sent the command *Door Bypass + Zone Enabling* for a specific floor (not safe).

› The car is located in the appropriate door zone.

› The speed is less than 0.8 m/s.

All other conditions (e.g. monitoring the relevelling speed) are implemented by the *FST* because no safety system is designated here.

3.1.6 Inspection end switch

The inspection end switches limit the range of motion of the inspection control. They make sure that the car is decelerated before the equipment that ensures the protected space becomes active (if present: folding supports or pre-triggered stopping system) (see EN81-21, 5.5.3.4 and 5.7.3.4).

The requirement that the limits of the normal range of motion must not be overrun (EN81-20, 5.12.1.5.2.1 g) is not to be monitored by a safety device and must instead be implemented in the lift controller.

If a protected space safeguard is not required for the shaft pit (e.g. because nobody is located in the protected space), the inspection end switch does not have to be active for the shaft pit.

If a protected space safeguard with access door monitoring is required for both shaft ends but only one lift engineer accesses the car to perform an inspection run, the inspection end switch and the pre-triggered stopping system for the shaft pit protected space may be ignored, since the protected space is not required.

Inspection end switches are taught in installation mode. In the case of equipment such as folding supports or a pre-triggered stopping system, the shutdown mechanism is to be selected before this equipment becomes active. If such equipment is not present – i.e. a natural protected space exists – the shutdown mechanism is to be selected so that the end floors are not overrun.

3.1.7 Unintended movement with opened doors

Protection against unintended movement (EN81-20, 5.6.7) is aimed at decelerating the car within a designated range when it is moving away from the floor with opened doors. The monitoring becomes active once the car is at a floor with opened doors. It ends once the doors are closed. If a movement is detected which is not permitted, SHK and SBR are opened.

This function is locking, i.e. the state is saved in EEPROM (power-cycle-protected) and a qualified person is required on site to put the lift back into operation.

The safety brake (SBR relay output) is monitored through a positively driven feedback contact. This corresponds with the safety device required in EN81-20, 5.6.7.8. If the lift brake is being used as an actuator for this safety function, the monitoring must be implemented externally (acc. to EN81-20, 5.6.7.8).

UCM detection is active in conjunction with the *Door bypass* safety function; for the UCM case of "gear breakage", the *Loss of traction* safety function takes effect and stops the installation in accordance with UCM requirements.

The corresponding reaction time for calculating the stopping distance can be found in the *System data* table in chapter *Technical data - S2* (*see Loss of traction - standstill monitor, page 209.*)

3.1.8 Access door monitoring

The access door monitoring becomes active when it has been wired and a shaft door to the car roof or the shaft pit is opened. To this end, separate switches must be provided on the shaft doors. Both access points are monitored separately.

Normal operation is prevented when access door monitoring is active, i.e. you can only perform inspection runs when the access door is closed and locked again.

The access door monitoring is locking, and the locking status is saved in EEPROM (even beyond resetting). It can only be reset through the appropriate reset function (separate safety function).

Attention: Via a separate, safe input you configure whether the access monitoring boots in a locked sate after a reset. This is necessary if there are no external measures to ensure that access during a reset or power failure leads to a safe state (lock active) during booting.

Examples:

› A non-latching triangular contact for the access to the protected space must boot in a locked state after a reset, because access during a reset / power failure will not be detected during booting.

Only monostable (non-latching) NC contacts must be used.

3.1.9 Resetting the access door monitoring

This safety function is configured together with the access door monitoring. Both access points (car roof and shaft pit) are reset separately. Access door monitoring is generally required for short heads and short pits (EN81-21, 5.5.3.2, EN81-21, 5.7.3.2).

A reset function is also intended for resetting the inspection control in the shaft pit, but which does not have to reach any particular safety level (EN81-20, 5.12.1.5.2.2). Using the reset function for the access to the shaft pit, a possibly locked inspection control in the shaft pit is also reset simultaneously (see the "Inspection switch" safety function in this document).

The access door monitoring is reset under the following conditions:

› A valid reset pulse is detected at the SK reset and SG reset inputs. (The pulse is valid if the button in question is pressed for a period of 3 to 6 s.)

› The related inspection control (SK or SG) is switched off.

› The related equipment that secures the protected space (SK/SG safeguard inputs, e.g. folding supports) is in an inactive position.

› The SHK is closed, i.e. all access doors are closed and locked and all emergency braking switches are in the normal position.

Attention: It is possible to reset the access door monitoring for the shaft pit, even though one additional lift engineer is located on the car roof and vice versa. Normal operation is only possible again once all access door monitors have been reset separately.

3.1.10 Pre-triggered stopping system

In the case of reduced shaft heads and pits, the protected space for an *inspection drive* may also be secured by a *pre-triggered stopping system*, except using mechanical stops (see EN81-21, 5.5.2.3, EN81-21, 5.7.2.3). The *pre-triggered stopping system* safety function is always active in the software and cannot be deactivated. For the protected space safeguard, a suitable actuator must be connected to the *SBR relay* output.

At the shaft ends, the inspection end switches (see corresponding section) first interrupt the safety circuit (SHK relay). If the car does not decelerate as a result, the safety brake is also automatically activated (SBR relay). Once the SBR relay is triggered, the safety circuit (SHK relay) is also permanently opened. The position of the inspection end switches must be chosen so that the pre-triggered stopping

system can stop the system safely prior to breaching the protected space.

As part of system planning, response times and braking distances must be determined so that when the car is stopped in the worst case scenario the minimum protected space is guaranteed.

This function is locking, i.e. the state is saved in EEPROM (power-cycle-protected) and a qualified person is required on site to put the lift back into operation.

If a protected space safeguard is not required (e.g. because nobody is located in the protected space), the pre-triggered stopping system does not have to be active for this protected space. The pre-triggered stopping system is only active together with the inspection end switch (see corresponding section).

3.1.11 Loss of traction

With an open safety circuit, monitoring is performed as to whether the car decelerates or does not move on from its stop position. If a movement is detected, the SHK and SBR open. The safety function is locking, i.e. it can only be reset by personnel on site.

$V_{Nom.}$	Reaction time - Loss of traction	
	Standstill monitoring	Brake monitoring
0.30 m/s	69 ms	609 ms
0.45 m/s	69 ms	619 ms
0.63 m/s	69 ms	639 ms
0.80 m/s	69 ms	649 ms
1.00 m/s	69 ms	669 ms
1.25 m/s	69 ms	689 ms
1.40 m/s	69 ms	699 ms
1.60 m/s	69 ms	719 ms
1.85 m/s	69 ms	739 ms
2.00 m/s	69 ms	749 ms
2.50 m/s	69 ms	789 ms
3.00 m/s	69 ms	829 ms
3.50 m/s	69 ms	879 ms
4.00 m/s	69 ms	919 ms

On request, the reaction times can be calculated for an individual nominal speed that is not listed in the table.

3.1.12 Prevention of normal operation (bypass)

A function is provided by S2 which safely prevents normal operation during bypass and only permits inspection and auxiliary mode (EN81-20, 5.12.1.8.3 f). The bypass itself (the bridging of the safety circuit) is connected externally.

A safe input is queried. If it is in a safe state (input open and GND), normal operation is prevented. An external, positively driven NC contact on the bypass switch must be wired to this input.

3.1.13 Inspection switch

The inspection control enables the movement of the car for the purpose of maintenance and repair work. Two independent inspection pods are connected (car roof and shaft pit).

If the inspection switch becomes active, the following actions are performed:

› Normal operation and relevelling (door bypass) are prevented.

› Auxiliary mode is prevented and the AUX relay is opened so that SHK contacts bypassed in auxiliary mode are active again.

With a natural protected space, the return to S2 normal operation occurs when the inspection switch is switched back into the *normal operation* position. However, the FST controller continues to maintain the inspection mode until the following conditions are met:

› With the FK inspection control switched off beforehand, the locking device of the shaft door must be interrupted. This indicates that the lift engineer has left the car roof.

› With the SG inspection control switched off beforehand, the safety circuit must be closed and a RESET of the FST access monitoring must be performed (key code).

3.1.14 Monitoring the inspection buttons

The two inspection controls on the car roof and in the shaft pit are mutually interlocked. If both inspection controls are switched on, motion is only permitted if the same direction inputs are activated on both inspection controls.

When both inspection controls are active, the inspection speed is **slow**[1] if **fast** is not pressed on both pods.

If a direction input is active in the activated inspection mode, then the SHK is closed and a corresponding drive command is sent to the lift controller via *CANopen*.

The direction buttons of the inspection control are monitored, i.e. when the lift engineer gives a command and the car moves in the wrong direction (approx. 10 cm), an error is set. This function is locking, i.e. the error must be reset via the error-reset function.

[1] **Slow** and **fast** refers to the option of moving slowly or quickly (comfort function) with the inspection control with the press of a button. In any event, the permitted inspection speed must not be exceeded.

3.1.15 Auxiliary mode switch

In auxiliary mode, movement can be performed using the auxiliary mode control. Auxiliary mode is only active if no inspection control is activated.

Auxiliary mode is active if the auxiliary mode input is activated. Normal operation is then no longer possible.

If auxiliary mode is activated, the internal emergency end switches and the pre-triggering of the speed limiter are deactivated. Also, the AUX relay which bypasses all the external switches mentioned in EN81-20, 5.12.1.6.1 d) is closed.

If a direction input is active when auxiliary mode is activated, then the SHK is closed and a corresponding drive command is sent to the lift controller via CANopen.

The direction buttons of the auxiliary mode control are monitored, i.e. when the lift engineer gives a command and the car moves in the wrong direction (approx. 10 cm), an error is set. This function is

locking, i.e. the error must be reset via the error-reset function.

3.1.16 Mechanical equipment (folding supports)

The inputs for the mechanical equipment (moving stops as per EN81-20, 5.2.6.4.3.1 a, EN81-20, 5.2.6.4.4.1 e, EN81-21, 5.5.2.5, EN81-21, 5.7.2.5) are always monitored. If they are not necessary, they are to be replaced by 24-V bridges.

The following states exist for the shaft head and shaft pit:

S2 inputs		**Folding support input normal operation**	
		Closed	**Open**
Folding support input inspection operation	**Closed**	Normal operation mode permitted, inspection mode permitted (Folding support not present, inputs bridged)	Inspection mode permitted (Folding support is folded out)
	Open	Normal operation mode permitted (Folding support is folded up)	Neither inspection nor normal operation permitted (Folding support is moved)

In normal operation mode, the output (SHK) of the function is closed.

In inspection mode, the output (SHK) closes the function once a valid inspection command arrives.

If both folding support inputs are closed, movement can be performed both in normal operation mode and in inspection operation mode. A folding support is not required in this case because the natural protected space suffices.

If both folding support inputs are opened, the output (SHK) is always opened. Neither normal operation nor inspection operation is possible. This is the case while the folding support is being folded up/out.

Auxiliary mode control is always permitted while the inspection pod is switched off. However, it is not permitted from the time of shaft entry (shaft door access monitoring) up until the resetting of the shaft access of auxiliary mode.

3.1.17 Temporary protected space

In inspection operation with mechanical equipment (folding support) for the protected space safeguard, the time period between door opening and setting up the supports and between folding up the supports and leaving the danger zone are especially critical. The SHK is already opened through the access monitoring so that the lift brake engages. In addition to this, a *temporary protected space* is activated in the time periods mentioned in which the safety brake (SBR relay) releases (see EN81-21, 5.5.2.5.3 and 5.7.2.5.3).

A brief waiting time of 1.5 s is included between door opening and the activation of the safety brake so that a triggering of the safety gear is prevented if the car is moving.

Any optical or acoustic signals that may be necessary that indicate the status of the safety devices to the lift engineer upon entry into the shaft pit or car do not require a SIL and are implemented by the lift controller (see EN81-21, 5.5.4 and 5.7.4).

3.1.18 Acceleration monitoring

In the event of unnaturally high acceleration (free fall), the acceleration monitoring performs an emergency-stop of the car. In comparison to the speed monitoring, this safety function has the advantage of being able to decelerate the car even at low speeds, since speed monitoring only becomes active once the shutdown speed is exceeded.

The following rules apply:

› The acceleration monitoring only becomes active from a minimum speed of 0.3 m/s. As a result, loading and unloading operations do not initiate the trigger.

› Acceleration of over 6 m/s² leads to a shutdown (free fall situation).

The acceleration monitoring safety function is a prerequisite for the possible reduction of the buffer at the shaft ends.

3.1.19 Installation mode preventing normal operation

Installation mode enables various actions (changes to safety parameters or partial movement of the car without position data) which limit the safety of the system. Due to the other safety functions, it is already ensured that these limits cannot be active in normal operation. This safety function is used as an additional layer of protection in case one of the other safety functions should fail.

This ensures that normal operation is reliably prevented when installation mode is active.

3.1.20 Monitoring the inspection and auxiliary speed

Reduction of the inspection buffer speed

According to the standard, the moving stops in inspection operation must be fitted with buffers that are designed for a nominal speed (EN81-21, 5.5.2.1.2.1).

In order to prevent large buffers for fast systems, the maximum inspection speed (0.63 m/s) is monitored in the S2 system. If it is exceeded in inspection operation, the SHK relay opens.

The SHK relay closes again if the FK stops without locking. Consequently, the lift engineer can potentially continue moving and exit the car without getting locked in.

As a result of this measure, the buffers of the moving stops must be designed for the inspection speed (0.63 m/s).

Reduction of the shaft end buffer speed

The monitoring of the auxiliary speed is designed to protect the buffers at the shaft ends, which could become damaged if the auxiliary speed is set incorrectly.

Note:
The *monitoring the inspection and auxiliary speed* safety function is always active in inspection operation and in auxiliary mode, irrespective of whether or not the folding supports are configured.

3.2 Basic safety principles

During commissioning, the installation of the S2 safety system represents a high risk for the lift engineer, because the system can only offer a low level of safety in principle. In particular, the monitoring of the nominal speed (safety brake during Over- speed) is not available. During the first steps of commissioning, the lift engineer bears a lot of responsibility, especially for his/her own safety:

Installation mode safety risk:

› In installation mode, the position-dependent safety functions are out of operation until either one of the four end switches has been taught or the tape switch is connected.

› In installation mode, end switches that have not been taught are not active.

Consequently, it is ensured that the lift engineer can first move the car for the purpose of tape installation in the shaft and subsequently, during the teaching of the end switches, enjoys the greatest possible safety that the system can offer.

Installation and teach mode differentiation:

The **installation mode** of the S2 safety system can only be activated with a key switch or something similar. Installation mode must only be accessible to one lift engineer who is aware of his/her responsi-

bility and is able to correctly assess risk and, where necessary, take contingency measures. In installation mode, the car can only be moved using the auxiliary mode and inspection control.

The **teach mode** of the *S2* safety system can be accessed by a simple switch. It is much less critical than installation mode. All safety functions are in operation. Only the floor positions and the door zone length can be modified. After activating the teach mode, normal operation of the lift by passengers is prevented by the FST (landing calls are blocked). The car can be moved using the auxiliary mode and inspection control or by car calls.

The following basic safety principles apply throughout the entire commissioning phase:

› The lift engineer must know which safety functions are active at every point in time during commissioning. Consequently, the installing engineer can assess whether additional measures are necessary.

› Safety-related parameters must be tested following configuration or modification before safety can be guaranteed.

› All commissioning steps and every subsequent change must be documented by the lift engineer. An appropriate template is printed in the user documentation.

› The system must not be configured via remote access (EN81-50, B.1, no. 7). In other words, the lift engineer must be on site to perform configuration changes.

› All changed settings must be checked by the S2 safety system for plausibility before becoming active.

4 Commissioning table

The commissioning table provides an overview of the required commissioning steps. All the steps do not need to be performed in every system. NEW *LIFT* recommends the following procedure:

Planning phase

› First the necessary safety functions must be identified. All safety functions that are not required can be deleted from the table.

› If contingency measures are necessary, they may have to be organised as early as during the planning phase.

› The necessary parameters of the safety functions must be determined.

Preparing the system

› The safety of the lift engineer must be ensured during the following commissioning steps (possibly through contingency measures).

Commissioning steps

› Every single one of the commissioning steps in the table marked with a "+" in the required safety functions must be performed.

› For the safety function "unintended movement", the safety actuator can also be the lift brake. In this case, the step marked with a "+" can be omitted.

› Some parameters (e.g. trigger speed) must be configured even though the safety function is not required. This is because the safety function cannot be deactivated and it would trigger if it is incorrectly configured. In such cases, only the configuration of the parameter is necessary; the check (with regard to safety) can be omitted.

› The entire commissioning process is documented in the prepared form, which is supplied together with the commissioning manual.

This section describes the steps necessary for commissioning the S2 safety system. The individual commissioning steps vary depending on the circumstances of the system.

In the table below, the necessary commissioning steps are listed depending on the safety functions of the *S2 safety system*.

The necessary S2 safety functions (grey area) must be defined during system planning. The commissioning steps (1–26) to be performed for every required safety function are marked in the matrix with a "+". Commissioning steps that cannot be assigned to a required S2 safety function may be skipped.

Colour	Meaning
A1	The safety function can be switched on or off by configuring or wiring the S2 system.
A2	The safety function is permanently installed in the system and is always active. However, it may not be required for the system or it is replaced by an external safety system.
A3	The safety function is permanently installed in the system and is always active. It cannot be deactivated or replaced by an external system.
B1	Commissioning steps that have to take place prior to installation and commissioning of the S2 system.
B2	The S2 system is in installation mode
B3	The S2 system is in normal operation mode
B4	The S2 system is in teach mode
C1	In this state, the related safety function is not yet active. It cannot guarantee safety.
C2	In this state, the related safety function is active but cannot yet be considered safe because the corresponding test has not yet been performed.
C3	In this state, the safety function is fully functional. Safety is guaranteed.

		S2 safety functions																			
	Commissioning steps	A1 - Over- speed (pre-triggering)	A1 - Over- speed (limiter)	A2 - Deceleration monitoring	A3 - Emergency end switch	A1 - Door bypass	A3 - Inspection end switch	A2 - Unintended movement	A1 - Access monitoring	A1 - Resetting the access monitoring	A1 - Pre-triggered stopping system	A2 - Loss of traction	A2 - Prevention of normal operation (bypass)	A3 - Inspection switch	A3 - Inspection switch UP/DOWN	A3 - Auxiliary mode switch	A1 - Mech. equipment, folding supports	A1 - Temporary protected space	A2 - Acceleration monitoring	A2 - Inspection and auxiliary mode speed	A3 - Installation mode preventing normal operation
1	B1 - System installation & wiring	+ C1	+ C1	+ C1	+ C1	+ C1	+ C1	+ C1	+ C1	+ C1	+ C1	+ C1	+ C2	+ C2	+ C2	+ C2	+ C2	+ C1	+ C1	+ C1	C2
2	B1 - Check important system functions	+ C1	+ C1	+ C1	+ C1	+ C1	+ C1	+ C1	+ C1	+ C1	+ C1	+ C1	+ C2	+ C2	+ C2	+ C2	+ C2	+ C1	+ C1	+ C1	C2
3	B2 - Check installation mode	C1	C1	C1	C1	C1	C1	C1	C1	C1	C1	C1	C2	C2	C2	C2	C2	C1	C1	C1	+ C2
4	B2 - Set safety parameters	+ C1	+ C1	+ C1	+ C1	+ C1	+ C1	+ C1	+ C1	+ C1	+ C1	+ C1	+ C2	+ C2	+ C2	+ C2	+ C2	+ C1	+ C1	+ C1	C3
5	B2 - Check auxiliary mode control	C1	C1	C1	C1	C1	C1	C1	C1	C1	C1	C1	C2	C2	C2	+ C2	C2	C1	C1	+ C1	C3
6	B2 - Check SHK relay trigger	+ C1	+ C1	+ C1	+ C1	+ C1	+ C1	+ C1	+ C1	+ C1	+ C1	+ C1	+ C2	+ C2	+ C2	+ C2	+ C2	+ C1	+ C1	+ C1	C3
7	B2 - Check traction	+ C1	+ C1	+ C1	+ C1	+ C1	+ C1	+ C1	+ C1	+ C1	+ C1	+ C1	+ C2	+ C2	+ C2	+ C3	+ C2	+ C1	+ C1	+ C1	C3
8	B2 - Check SBR relay trigger	C1	+ C1	C1	C1	C1	C1	(+) C1	C1	C1	+ C1	+ C1	C2	C2	C2	C3	C2	+ C1	+ C1	C1	C3
9	B2 - Check folding supports protected space vers.	C1	C1	C1	C1	C1	C1	C1	C1	C1	C1	C1	C2	C2	C2	C3	+ C3	+ C1	C1	C1	C3
10	B2 - Check inspection control	C1	C1	C1	C1	C1	+ C1	C1	C1	C1	C1	C1	C2	+ C3	+ C2	C3	C3	C1	C1	+ C1	C3
11	B2 - Install position system	+ C2	+ C2	+ C1	+ C1	+ C1	+ C1	+ C1	C1	C1	+ C1	+ C2	C2	C3	+ C2	C3	C3	C1	+ C2	+ C2	C3
12	B2 - Check position system	+ C2	+ C2	+ C1	+ C1	+ C1	+ C1	+ C1	C1	C1	+ C1	+ C2	C2	C3	+ C3	C3	C3	C1	+ C3	+ C3	C3
13	B2 - Check loss of traction	C2	C2	C1	C1	C1	C1	C1	C1	C1	C1	+ C3	C2	C3	C3	C3	C3	C1	C3	C3	C3
14	B2 - Teach end switch	C2	C2	C1	+ C2	C1	+ C2	C1	C1	C1	+ C2	C3	C2	C3	C3	C3	C3	C1	C3	C3	C3
15	B2 - Teach end floors	C2	C2	+ C2	C2	C1	C2	C1	C1	C1	C2	C3	C2	C3	C3	C3	C3	C1	C3	C3	C3
16	B2 - Check inspection end switch	C2	C2	C2	C2	C1	+ C3	C1	C1	C1	C2	C3	C2	C3	C3	C3	C3	C1	C3	C3	C3
17	B2 - Check access monitoring	C2	C2	C2	C2	C1	C3	C1	+ C3	+ C3	C2	C3	C2	C3	C3	C3	C3	+ C3	C3	C3	C3
18	B3 - Check trigger speed	+ C3	+ C3	C2	C2	C1	C3	C1	C3	C3	C2	C3	C2	C3	C3	C3	C3	C3	C3	C3	C3
19	B3 - Check deceleration monitoring	C3	C3	+ C3	C2	C1	C3	C1	C3	C3	C2	C3	C2	C3	C3	C3	C3	C3	C3	C3	C3
20	B3 - Check VA protected space vers.	C3	C3	C3	C2	C1	C3	C1	C3	C3	+ C3	C3	C2	C3	C3	C3	C3	C3	C3	C3	C3
21	B3 - Check emergency end switch	C3	C3	C3	+ C3	C1	C3	C1	C3	C3	C3	C3	C2	C3	C3	C3	C3	C3	C3	C3	C3
22	B3 - Check bypass switch	C3	C3	C3	C3	C1	C3	C1	C3	C3	C3	C3	+ C3	C3	C3	C3	C3	C3	C3	C3	C3
23	B4 - Set door zone length	C3	C3	C3	C3	+ C1	C3	C1	C3	C3	C3	C3	C3	C3	C3	C3	C3	C3	C3	C3	C3
24	B4 - Teaching and checking floors	C3	C3	C3	C3	+ C3	C3	+ C2	C3	C3	C3	C3	C3	C3	C3	C3	C3	C3	C3	C3	C3
25	B4 - Check unintended movement	C3	C3	C3	C3	C3	C3	+ C3	C3	C3	C3	C3	C3	C3	C3	C3	C3	C3	C3	C3	C3
26	B3 - Normal operation	C3	C3	C3	C3	C3	C3	C3	C3	C3	C3	C3	C3	C3	C3	C3	C3	C3	C3	C3	C3

5 Required knowledge

5.1 Definitions of terms

Teach mode

Teach mode indicates whether teach mode has been switched on via the FST-3 menu and confirmed by the auxiliary mode control. It can assume the following values:

› Teach mode active

› Teach mode inactive

If teach mode is active:

› All safety functions except door bypass are in operation.

› Normal operation for passengers is prevented by the FST; landing calls are blocked.

› The car can be moved using the auxiliary mode and inspection control.

› If auxiliary mode and the inspection control are deactivated, the car can be moved by car calls.

› Only floor positions and door zone lengths can be modified.

Installation mode

Installation mode indicates whether installation mode has been switched on via the FST-3 menu and confirmed by the auxiliary mode control. It can assume the following values:

› Installation mode active

› Installation mode inactive

When installation mode is active:

› All parameters for the S2 safety device that can modified using software can be changed.

› The car can be moved using the auxiliary mode and inspection control.

› End switches that have not been taught are bridged using software.

› Position-dependent safety functions – especially the safety function for monitoring speed and acceleration – are out of operation until

»either one of the four end switches has been taught or

»the tape switch has been connected and

»valid position data is available.

Service operating error

A service operating error occurs if both installation mode and teach mode are switched on. This is displayed with the error message `TEACH/INST. FAULT.` in Line B of the FST.

Normal operation state

The normal operation state indicates whether normal operation is active, i.e. the lift can be used in its normal mode of operation. It is active when auxiliary mode, inspection, teach mode and installation mode are not active and there is no service operating error. It can assume the following values:

› Normal operation active

› Normal operation inactive

5.2 Switching installation and teach mode on and off

5.2.1 Installation mode

Installation mode is switched on or off via the FST-3 menu and must be confirmed by additional actuation within a certain time window by means of the auxiliary mode control. Access to installation mode is only permitted to individuals who are familiar with the safety risks of installation mode. To additionally protect the normative requirements of the control cabinet or machine room, NEW LIFT therefore recommends using the password function of the FST-3.

From the FST-3 display, the lift engineer can immediately tell if installation mode is active. After an S2 reset in installation mode, installation mode immediately becomes active again. This prevents the system from transitioning into normal operation unintentionally following a reset, even though important safety functions (e.g. the "Over- speed" safety function) have not yet been tested.

5.2.2 Teach mode

Teach mode is switched on or off via the FST-3 menu and must be confirmed by additional actuation within a certain time window by means of the auxiliary mode control.

Note:

If both modes are active at the same time, this constitutes a service operating error. The system detects the error, stops the lift and notifies the lift engineer via a notification in the FST.

6 System properties

The FST-3 controller can be used to operate all common types of cable and hydraulic lifts. The pre-assembled FST controller can easily be adapted to any given lift system on-site using the FST menu. New software versions can easily be installed at any time via the USB 2.0 port without changing system-specific settings.

Note! The FST-3 lift control system always consists of two assemblies. The FST-3 and the S2 with safety-related functions. The "FST-3" system is therefore referred to in various chapters as the safety system because the two assemblies cannot or are not permitted to be operated separately.

The FST-3 cannot be substituted by other FST controllers. However, the FST peripherals such as the travelling cable and all LON bus components are compatible.

The S2 safety system is a magnetic-tape-based shaft information and safety system (PESSRAL) for lifts, which primarily covers the following functions:

› Various safety functions cited in EN81-20 and EN81-21.
› Relaying the car position to the FST controller for shaft information.
› Relaying system conditions to the FST controller for commissioning and diagnostics purposes.
› Functions not relevant to safety, such as door zone signalling.

Detailed safety functions can be found in the table in chapter 3.1,
see 3.1 Overview of the safety functions, page 16.

The system consists of the following components and must only be used in this combination. Only and solely original components supplied (delivered) from NEW LIFT may be used.

› Magnetic tape
› Magnetic tape assembly kit
› Sensor assembly kit
› Sensor LIMAX33RED (short designation: LIMAX3R)
› S2 assembly
› FST-3 assembly

Application area

› Maximum speed 4.0 m/s – up to 10 m/s upon request
› Maximum travel height 262 m
› 64 floors
› Protection class of LIMAXR3 sensor: IP54
› Protection class of S2: IP10

Housings, or similar, in which the FST-3 safety system is installed must have at least protection class IP21. This protection class is usually met by commonly used doorframes or control cabinets.
If the FST-3 (S2) is not completely enclosed in a control cabinet, or similar, by NEWLIFT, the installation company must ensure a protection class of at least IP21 or adapt the conditions on site.

Detailed technical data
see 17 Technical data – Sensor, magnetic tape and bracket, page 208

The system is suitable for new lift installations, replacement systems and partial refurbishments.

The system offers the following advantages over "conventional" systems:

› Various components are omitted.
› Assembly times of components saved.
› Less susceptible to faults due to the omission of components and their assembly and configuration.
› Saving on the configuration and maintenance work involved with the omitted components.

› Easy on the environment due to saving the raw materials of the omitted components.

› Economic benefit in relation to merchandise management, logistics and transport due to saving on components.

The system is designed for installation in a permanent location, i.e. after putting into operation, disassembly and subsequent assembly in another location (lift) is not permitted.

6.2.1 Technical properties – FST-3

› FST-3 circuit board with separate processors for call processing (32-bit), drive control and bus management

› Integrated repeater for electrical isolation of shaft and car bus

› RS-485 / RS-422 / regulator interface for communication with drive regulators

› Flash memory and battery-buffered RAM for an error list with up to 100 entries

› USB 2.0 type-A port for using USB memory media to download and update data

› USB 2.0 mini-B as PC interface (laptop on site)

› CANopen Lift (CiA 417)

› Network connection - Ethernet RJ45 LAN 10/100 MBit

› Onboard microSD card for permanent, long-term recording of system activities for up to 31 days as well as for recording various statistics and the error list

› 240x320 TFT display with 262K colours as split-screen for configuration and menu actions and for navigation and lift status displays using the NEW *LIFT "Guide"*

› Keypad for intuitive navigation in the main menu, Test menu and *Guide* menu

› 8 programmable I/O ports on the FST main circuit board

› 72 programmable I/O ports on additional RIO modules spread over the control cabinet or car top box

› 5 programmable onboard relays

› Emergency mode monitor for the freeing of persons acc. to EN81-20

› Button lock against accidental actuation

6.2.2 Technical properties – S2

› 29 electrically isolated inputs

› Relay pairs for actuating the safety brake, anti creep device, etc.

› Relay pairs for bridging the safety circuit in the case of auxiliary mode control

› Relay pairs for bridging the door circuit (landing, relevelling and quick start with open door)

› Relay pairs for interrupting the safety circuit in the case of: UCM, end switches, inspection end switches, Over- speed, etc., *see 3 Safety functions, page 16*.

› Output for door zone lamp

› Encoder interface for connecting the magnetic tape sensor LIMAX33R (ELGO) via RS485

› 2 x microprocessors

› CAN OPEN interface

Maximum contact load is 2A, backup fuse characteristic "B"

The device must be disposed of after 20 years!

7 User interface of FST-3 controller

The user interface of the FST controller is located on the FST main circuit board in the control cabinet of the lift system. The FST user interface consists of front panel, LC-Display, keypad and LEDs. Most interfaces are the same as those of the FST-2XT and XTs.

User interface of FST-3 controller

7.1 Keypad functions

The FST controller is operated using seven buttons. The keys have different functions in the different displays.

7.1.1 When switching on

```
SAFETY CCT CLOSED

>AX<  >BX<   ___I___
 00          13:06:56
```

Shift	Pressing and holding the Shift button during the switch-on sequence of the FST starts emergency operation. In emergency operation, no drives are possible. Emergency operation is required if the FST cannot be switched on in normal mode due to a malfunction. The complete FST menu and the USB interface are active in emergency operation!

7.1.2 Main screen

```
SAFETY CCT CLOSED

<A>          ___I___
 00          13:06:56
```

▲	Set car call to top floor
▼	Set car call to bottom floor
◀	Switch landing control on and off (switch function)
▶	Open test menu
Enter	Open main menu
Shift	Activating emergency operation: before switching on, press and hold down until the FST has completely started up (see FST manual)
Shift + ▲	Set car call to next floor up
Shift + ▼	Set car call to next floor down
Shift + ▶	Scroll through the right status messages in line C
Shift + ◀	Scroll through the left status messages in line C
Shift + Enter	Display information page
Shift + ◀ + ▶	Switch diagnostic message in line C on or off
▲ + ▼ + ◀ + ▶	Perform controller RESET

Drive	Switch over to converter menu (DCP)
Func	Guide functions menu button
Select	Selection / Enter button for confirming the function in the Guide menu
△	Menu navigation: scroll UP
▽	Menu navigation: scroll DOWN

7.1.3 Main menu and test menu

```
MAIN MENU
 Drive
 Config
 >Positioning
```

▲	Move cursor up
▼	Move cursor down
◀	Exit submenu
▶	Change menu level
Enter	Select submenu / menu item
S+↑	Sets all places of a value to "_"

```
Clock Setting

13:45:01_
```

▲	Increase value
▼	Decrease value
◀	Move cursor left
▶	Move cursor right
Enter	Confirm setting

7.1.4 Error list

```
ERROR[00037/00040]
28.09 10:18:26
[012]
Door close failed
FLOOR: 03 V00 R01 I00
```

▼	Switch to 2nd to 8th information byte in line D
▲	Switch to initial display in line D
Shift + ▲	To previous error message
Shift + ▼	To next error message

7.1.5 Information page

```
--  FST Information ---
 HW Ver. :FST-3
 SW VER. :V2.000-0175
         :  26/11/2023
```

▲	Scroll one line up
▼	Scroll one line down
□	Back to main screen

7.1.6 Frequency inverter with DCP interface

Drive	Frequency inverters with DCP interface can be operated and configured from the FST menu (FST X11 connected). The menu of the frequency inverter is simulated on the FST display by pressing the Drive button once. The FST keys then perform the function of the frequency inverter keys. The FST display is restored by pressing the Drive buttons again.

7.1.7 Guide

7.2 S2 guide

The guide is an extension of the FST-3. It does not intervene in any operations performed by the controller and is operated with a different group of buttons. The four blue buttons, which are responsible for the guide, are located on the right side of the FST-3 front panel.

In the context of the S2, the S2 guide is of elementary importance.
► Use the S2 guide for commissioning and test steps!

Display

The display is divided into two sections and consists of the following parts:

› FST-3 display

The top part of the FST-3 display (lines A–D) is the configuration interface in addition to the usual user interface of the S2 system. Parameters are entered using the four white arrow buttons and two grey

function buttons underneath.

› Guide display

The lower part of the display shows the guide, which provides information about the individual menu items etc. of the FST-3 menu as well as other S2 information.

Buttons

The Func, Select, △ and ▽ buttons are NOT needed for changing the FST-3 parameters in the menu. They are used only for the navigation of the guide.

Use the Func button to open the Function menu. Press the button again to exit the menu.

The cursor can be moved in the selection table for the S2 submenu using the △ / ▽ buttons. The submenus with a coloured background can be selected with the Select button if the cursor is located on top of them.

The following functions of the guide can be selected with the Func button.

› Active Call List
› Help
› Event recorder
› Emergency status
› Door status
› I/O ports
› Safety circuit
› Positioning
› Load weighing
› Drive curve
› PawlCtrl
› S2 monitor
› S2 shaft table
› S2 I/O status
› S2 info

Choose the desired function by using the arrow buttons to move the colour highlighting over the terms and confirm the selection with the Select button.

Return to the standard Help menu with the Func button, use the arrow buttons to move the cursor onto the **Help menu** item and select with the Select button or, if a different parameter or menu item is called up on the FST-3, the guide automatically switches to the Help function.

Functions

Active Call List

Specifies the position of the car as well as all car calls and landing calls.

The displayed table contains the following three columns:

› In the **left column**, the existing floors are displayed from bottom to top with their floor name.

› The **middle column**, IDR (car), shows the received "-".

› The **right column**, ADR (landing), shows the received and not-yet-processed landing calls; these are marked with a "U" (up direction), with a "D" (down direction) or with a "B" (both directions) depending on door side and direction. If no landing call is pending, this is indicated with a "-".

The current destination is indicated with a "T" next to the corresponding floor name. The position of the car is indicated by a black rectangle next to the floor name.

Help

When navigating in the FST-3 menu, a brief description of the current menu item or parameter automatically appears in the guide.

If a different guide function is selected using the Func **button** while navigating in the FST-3 menu, the Help menu function appears in the Function menu which can be used to again call up the current FST-3

menu item.

Event recorder

Displays a filtered event list on the controller

Emergency status

Emergency mode monitor

Door status, I/O ports

Displays the programming of all freely programmable I/O ports and their activity

Safety circuit

Status of the SHK inputs and safety circuit bypass control

Positioning

Compiled display of the position value

Load weighing

Status of the empty–full and overload function

Drive curve

Graphical display of the last movement's speed or current speed

PawlCtrl

Graphical display of the inputs/outputs of the pawl control and positions of the car

S2 overview

S2 monitor

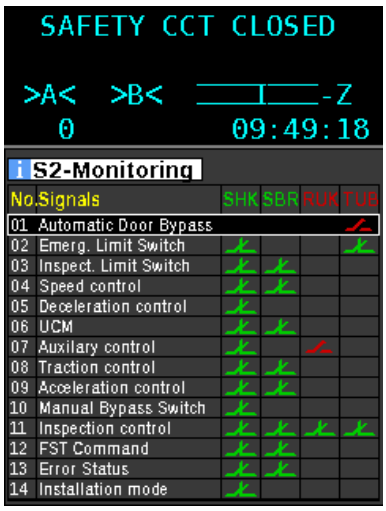

Overview of the S2 safety functions

The S2 monitor serves as an overview of the individual S2 functions. This overview is the basis for commissioning as well as for troubleshooting the S2 system and is intended for reading out system states. It is not possible to change parameters via the guide function. Detailed information of the individual functions can be found by scrolling the selection bar UP/DOWN and using the SELECT button. SHK, SBR, AUX and DOOR symbolically represent the relay pairs that are in the S2. The contacts of the SHK and SRB columns must always be green for car movement. If the contact of the respective function is red, the cause is to be determined there and rectified.

S2 shaft table

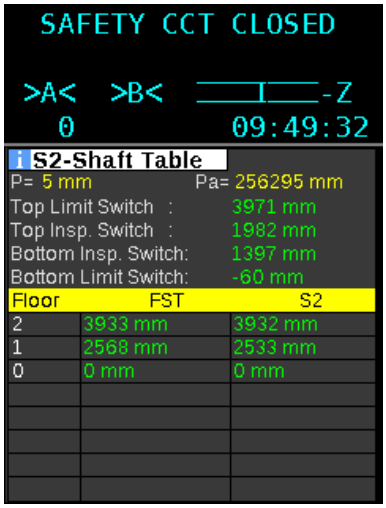

Table of the taught floor positions

The S2 monitor serves as an overview of the individual S2 safety functions.The S2 shaft table is of elementary importance for commissioning. The positions of the end and inspection switching points as well as floors that are necessary for the door zone function, UCM, etc., are shown here. In addition, the position of floor 0 and the position delta. Green means that the value has been taught and is within the valid parameters. Deviations of the S2 position from the FST shaft table greater than 50 mm are shown in yellow.

S2 I/O status

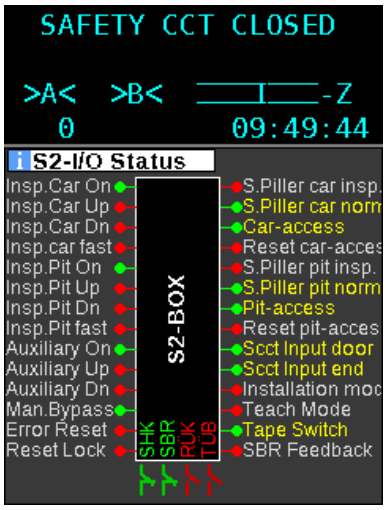

State of the I/O ports of the S2

The S2 I/O status shows all states of the inputs and outputs of the S2 .. This display can (e.g., during troubleshooting) replace a measurement device, as the state of the inputs and outputs is depicted graphically. If the dot of the respective function is displayed green, voltage is being applied. If the respective function is displayed yellow, this function is active.

Important!

Function active does not necessarily mean that the input is connected to voltage! In addition, the CAN connection status is also displayed here

S2 info

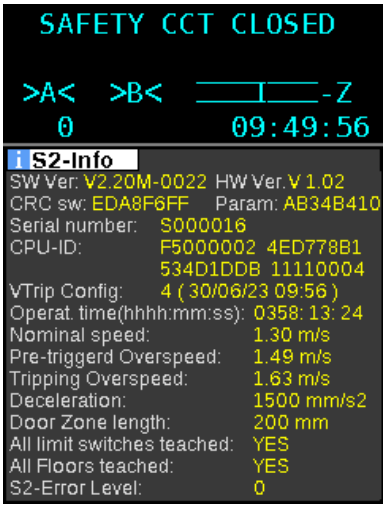

S2 system information

S2 info displays a complete overview of various pieces of system information that are relevant for commissioning and putting into service. Of elementary importance is that the speed of the installation match the nominal speed listed here. This is preset according to the specific order by means of an enabling code and is to be confirmed on site by the lift engineer.

Display

The display is divided into two sections and consists of the following parts:

› FST-3 screen

The top part of the display is the FST-3 screen with the same functions, menus and navigation found in the previous versions of the FST controllers. These four lines are the familiar display of the FST controllers and consist of four lines of 20 characters each. They are operated with the four white arrow buttons and three grey function buttons located underneath. Nothing has changed in the presentation and the keypad functions; everything functions as previously. After switching on and during normal operation, the FST-3 controller displays the main screen.

› Guide

The lower part of the display shows the guide, which provides information about the individual menu items of the FST-3 menu and which has additional functions that are described in the following.

7.2.1 Emergency mode monitor (NBM)

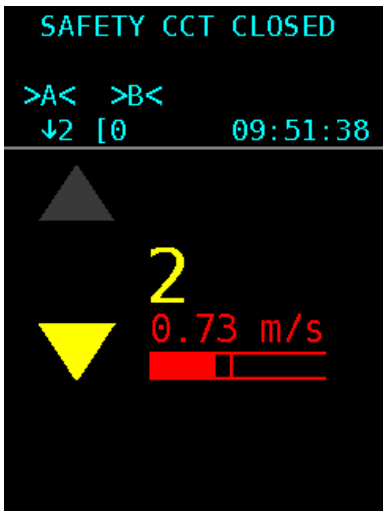

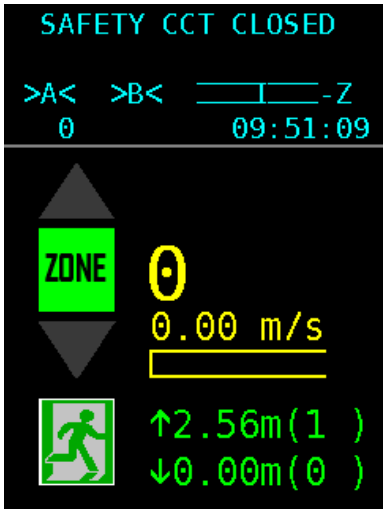

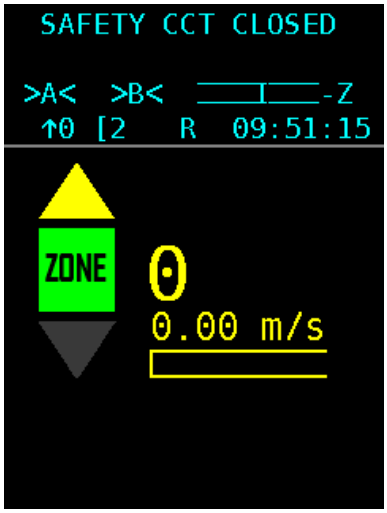

Emergency mode monitor (NBM)

The emergency mode monitor contains all information needed for the freeing of persons, should it be necessary. These include the physical direction, position, door zone and speed of the car. To be able to use this function during a power failure, the controller must be supplied accordingly with emergency power, e.g. from a UPS or similar.

▲	This yellow arrow indicates the physical direction of the car in the up direction; the flashing frequency of the arrow is dependent on the speed, slow flashing = slow speed and fast flashing or permanently on = fast speed
▼	This yellow arrow indicates the physical direction of the car in the down direction, the flashing frequency of the arrow is dependent on the speed, slow flashing = slow speed and fast flashing or permanently on = fast speed
ZONE	If the lift is in the door release area (door zone), this field illuminates green with black text "ZONE"
13	Displays the current car position with respect to the floor name. Attention! The car is only located in the door release area if the green "Zone" field illuminates!
0.00 m/s	Displays the current speed of the car. At V greater than 0.2m/s, the colour changes from yellow to red.
	Illustrates the distance between two floors. This display is intended to illustrate the direction to the next closest floor in the event of evacuation with auxiliary mode control.

7.3 TFT display and messages

The TFT display is divided into two sections; the upper part consists of four lines (A, B, C and D) with 20 columns each. After switching on and during normal operation, the FST-3 controller displays the main screen. The lower part of the display is described in Chapter 8.

7.3.1 Main screen

```
 SAFETY CCT CLOSED

>AX<            ---I---
 00           13:06:56
```

A	Maximum active state of the safety circuit
B	Active state or error
C	Status of the lift system / diagnostic message
D	Data for current drive mode

Line C has a special status. In normal mode (after power-on), it shows status messages (*see 7.3.4 Line C – Status messages, page 45*). Switch with the Shift + ◀ + ▶ button combination to display diagnostic messages *(see 7.3.5 Line C - Diagnostic messages, page 46)*.

See also *see 7.1 Keypad functions, page 34*.

7.3.2 Line A – Safety circuit messages

Display	Description
SAFETY CCT CLOSED	The safety circuit is completely closed (FST X14.1, FST X14.2).
SFTY-CLOSED MISSING	The input "Safety circuit closed" has no power. Possible reasons: › Terminal FST X14.1 has no power (normally bridged with X14.2) › Relay K14 (230V) on the FST is faulty
DOOR LOCK-A OPEN	The shaft door contact of door side A is interrupted (FST X14.3).
DOOR LOCK-B OPEN	The shaft door contact of door side B is interrupted (FST X14.2).*
DOOR A OPEN	The car door contact of side A is interrupted (FST X14.4).
DOOR B OPEN	The car door contact of side B is interrupted (FST X14.5).
DOOR C OPEN	The car door contact of side C is interrupted (FST X14.6).
MANUAL DOOR OPEN	A manual door contact is interrupted (FST X14.6).
EMERGENCY STOP	An emergency switch in the shaft is interrupted (terminal FST X14.7).
EMERGENCY STOP CAR	An emergency switch on the car is interrupted (FST X32.4).

The messages DOOR C OPEN, MANUAL DOOR OPEN and EMERGENCY END SWITCH are triggered by the same safety circuit input of the FST (TC input: FST X14. 6) and exclude each other.

Note! : * not with FST-3.

7.3.3 Line B – State messages

Display	Description
LOW 24 V!	The 24V power supply of the FST board (FST X1.1, X1.2) is below the permitted range of 17 V. Check power supply and cables in the main supply.
LANDING CALLS BLOCKED	Landing control is blocked by a safety circuit interruption (interruption before terminal FST X32.4), line A displays EMERGENCY STOP.
LANDING CONTROL OFF	The landing control has been switched off manually. Possible causes of switch-off: › Key of the FST keypad › Programmable input of an external RIO module › Input FST X1.14 › Programmable input on the FST controller › Key switch on car operating panel (FPM-1 X4.37 / FPM-2 X1.13) › Key switch on landing call panel (ADM input X3.12 / X3.13)
FIRE RECALL	A fire input is active. Possible causes of fire recall: › Fire input on land call module (ADM input X3.12 / X3.13) › Programmable input on the FST controller › GST Group Controller (see GST manual)
END-SWITCH TEST	The manual end-switch test is being executed (see test menu in the FST manual)
ES-SPEED MON. TEST	The manual test of the deceleration monitoring function at the top and bottom end floors is running (see test menu in the FST manual)
EVACUATION	The controller is in evacuation mode. The reason for the evacuation signal may be: › A programmable input on the FST controller › A programmable input on the GST Group Controller › LMS via protocol adapter module
SEND FAX	The controller is in fax mode (see Installation & Commissioning – Fax modem).
LIFT OFF	The controller has been switched off. Possible causes of switch-off: › Car lighting failure › Input "Car Lighting OFF", FST X1.13 › Programmable I/O port of a RIO module (external) › Programmable I/O port of the FST controller › Externally by the GST Group Controller or the LMS Lift Monitoring System
FIREMAN SERVICE	Fireman service mode has been activated. Possible causes of signal: › Key switch fireman service in car operating panel (FPM-1 X4.4 / FPM-2 X2.13) › Programmable I/O port of the FST controller › The state was saved after a power failure and has been reconstructed. The Fireman Mode Reset function must be executed to reset this state. › Key switch on landing call panel (ADM input X3.12 / X3.13) › GST Group Controller (see GST manual)
FILE TRANSFER ACTIVE	The controller is in data transmission mode to transfer files to a GST Group Controller or to a PC.
Attendant operation	The attendant controller is active.
INSPECTION MODE	The controller is in inspection mode (input FSM-2 X22.2). Attention: Line A of the FST display must show EMERGENCY STOP CAR!

Display	Description
CALIBRATION --	The calibration drive has been started. A ticker text displays the status. After completion of a successful calibration drive, the message CALIBRATION OK! appears. If the drive is interrupted prematurely, CALIBRATION ABORT! appears. Find the error in the error list and repeat the calibration drive.
APRON-EXTENDED!	The car apron is open (due to a shaft door interruption). Monitoring is performed via a programmable input on the FST controller.
LEARN DRIVE-ABORT!	The learn drive has been aborted due to an error. Find the error in the error list and repeat the learn drive.
LEARN DRIVE ACTIVE	The controller performs a learn drive.
LEARN DRIVE-START	The controller starts a learn drive.
LEARN DRIVE-OK!	The learn drive has been completed successfully.
LIGHT CURTAIN	The safety curtain replacing the car door has been interrupted. The contact is in the safety circuit instead of the car door contacts (see System description – Safety curtain).
DRM	A runtime monitoring error has occurred, the installation is brought to a standstill. Possible reasons include, among others: › Start-up problems › Runtime monitoring › Encoder failure › Car communication › Speed end switch › Zone missing › Motor failure › Forced stop › Emergency end switch › Door failure › Drive error › Special I/O port
INSTALLATION MODE	The controller is in installation mode.
EMERGENCY END SWITCH	The top emergency end switch is interrupted (FST X14.6, X14.7)
ORIENTATION	Only incremental positioning: After switching on, the controller performs an orientation drive to an end floor. The orientation drive can take place automatically or when the first call is placed.
PARKING ACTIVE	The controller sends the car to the programmed parking floor.
Landing PRIORITY	A priority landing drive has been triggered. Possible causes of signal: › Key switch on landing call panel (ADM input X3.12 / X3.13) › Programmable input on the FST controller › Programmable input on an external RIO module
CAR PRIORITY	A priority car drive has been triggered. Possible causes of signal: › Key switch on car operating panel (FPM-1 X4.37 / FPM-2 X1.13) › Automatically after a type Auto 2 priority landing drive
AUXILIARY MODE	The controller is in auxiliary mode (input FST X18.2). Attention: Line A of the FST display must show EMERGENCY STOP!
HOMING ACTIVE	The hydraulic lift is sent to the lowest landing.
SERVICE MODE!	The controller is in service mode.
SERVICE REQUIRED!	One of the service counters has exceeded a set limit.

Display	Description
SYSTEM STOP	The controller has been stopped via the FST menu.
OVER LOAD	The overload input on the FSM or on a programmable input is active.
USER ERROR	A user error has occurred (you can define up to three error messages as user errors). The number of the error is displayed.
USER ERROR 0	A user error has occurred (you can define up to three error messages as user errors). The number of the error is displayed.
USER ERROR 1	A user error has occurred (you can define up to three error messages as user errors). The number of the error is displayed.
USER ERROR 2	A user error has occurred (you can define up to three error messages as user errors). The number of the error is displayed.
V.I.P. MODE	The controller is in VIP mode. The source for the VIP mode can be: › LMS via protocol adapter module › Programmable input on the FST controller › FPM-2 X2.14 in the car operating panel
FULL LOAD	The full load input on the FSM is active.

7.3.4 Line C – Status messages

Line C is divided into two parts and displays one of the following status messages in the left part and one in the right part. This way you can select which two status messages you want shown simultaneously on the display.

Select the status message in the left-hand area with Shift+◀ ., in the right-hand area with Shift+▶.

Status	Display	Description
Car doors	<A>	Door A completely open
	>A<	Door A completely closed
	←A→	Door A is opening
	→A←	Door A is closing
	<A*>	Light barrier of door A active
	<A#>	Reversing contact of door A active
	<AX>	Door A is locked (test menu)
	<AL>	Door is in loading mode (loading button has been pressed)
	-A-	Door A is stopped
	?A?	State of door A is unknown (check door end switches)
	←←→→	Door open button active
	→→←←	Door close button active
	<←→>	Door open button permanently pressed
	>→←<	Door close button permanently pressed
Shaft positioning	Z	Zone message active
	F	Zone message missing
	–	Car is in levelled position
	___I__	Car position relative to level position (2.5 mm / pixel)
	⊻	Bottom correction switch active
	⊼	Top correction switch active
Car position	P=6200	Current car position in relation to the level position of the bottom floor in mm.

Status	Display	Description
Levelling	Pd= -2	Current position of the car relative to closest level position in [mm]
Car speed	V=1300	Current speed of the car in [mm/s]
Set / actual speed	I=======V2	Comparison between set and actual speed of the car. The left bar is a graphic display of the relation between actual speed and the set speed on the right.
Motor-Hours	BS=4351	Operating hours of the drive
Drive counter	FZ=123456	Number of completed drives
Load measurement	L=100 kg	Displays the current car load (only in combination with LCS)
Memory occupied	Rec: 45%	Memory occupied on the PC-Card when recording.

The door states marked with A also apply to doors B and C.

7.3.5 Line C - Diagnostic messages

Line C can be switched from status messages to diagnostic messages with key combination Shift+◄+►. You will find further information in the FST manual.

Display	Description
LIK-Errs:00000 00000	Absolute positioning only: Diagnostics of the absolute encoder function
ENC:10000000[989680]	Real-time display of the counted increments of the encoder on plug X2. Together with the travelled path, the counted increments can be used to calculate the resolution that is to be set. The first value corresponds to the decimal value; the second value ([ ]) corresponds to the hex value.
Gray=43210 TC BC ZB	Current state of the magnet switch during incremental positioning
Door-A: F1=00 F2=00	Current state of the FSM-2 for door A
Door-B: F1=00 F2=00	Current state of the FSM-2 for door B
Door-C: F1=00 F2=00	Current state of the FSM-2 for door C
Motor=00 VST=0000	Control-internal drive state and the states of the pre-control contact outputs
Tcp:Virt=0b Real=00	Generated and actually measured position messages of the car
SHK= ZbaABCNK	States of the safety circuit
Mgr1:Drv=00 Call=00	NEW LIFT internal diagnostic message
Mgr2:A=02 B=00 C=00	NEW LIFT internal diagnostic message
NextPoss=ff VT=V2	Next possible floor that can be driven to and the current set drive speed
Port EXIN1=EGALPUDR	State of input EXIN1
Port EXIO2=76543210	State of input EXIN2
Port H8IN1=ZBSMVO	State of input H8IN1
FSM-X6: L=1 V=0 K=0	State of the outputs on the FSM-2 X8 and X19
SRC:00 00 00 00 00	Source of the fireman mode, fireman service, landing control OFF, remote shutdown and service mode special drive signals
LWE: 255% E0 F0 O0	State of the weight sensor without LCS
LCS: 123456 E0 F0 O0	State of the weight sensor with LCS. 123456 corresponds to the raw value of the A/D converter coming from the LCS. Used for checking the function of the weight sensor.

Display	Description
Proj.Status=.....	State of the project-related program parts (in-plant)
Media S0:1 S2:0 U:0	State of the memory media
Pkt/s In=005 Out=002	Incoming and outgoing data packets of the FST controller in packets/sec
ASV: 0000000 P=[00]	State of the pawl-control
IN=0000 0000 00 #00 or OUT=0000 0000 00 #00	0000 0000 00 shows the last received/sent DCP data to/from the FST in HEX. #00 corresponds to the counter for current DCP transmission errors.
CMM: Module-01 =OK	State of the monitored LON modules OK: Module responding Fail: Module not responding OFF: CMM is switched off
FSM T= 01 R= 02	Counter that represents the round trip time of transmission (T) and receipt (R) of the data between FST and FSM. Both values should be approximately in sync with one another, i.e., the counter values should differ by no more than one.

7.3.6 Line D - Drive mode messages

Column	Display	Description
1	T	Auto test drive active
	S	No serial connection to the frequency inverter (FST X11)
	s	Data transmission to the frequency inverter via serial connection is faulty (FST X11)
2	↑	Direction of travel UP
	↓	Direction of travel DOWN
3-4	10	Current floor for the car
5-8	[13]	Car call and landing call on target floor
	[13	Car call to target floor
	13]	Landing call to target floor
	X13	Car control blocked
	13X	Landing control blocked
9		Not assigned
10	G	FST is integrated in a GST Group Controller.
	g	FST is integrated in a GST Group Controller but communication with the GST is faulty
	s	"Separated" group members
	P	Drive temporarily stopped
11	R	Flashes while recording data on the SD card
	F	Card is cleared
	B	Bank control mode: User group active
9-11	FTX	Data exchange from FST active (from FST to GST, LMS, etc.)
	FRX	Data exchange to FST active (from GST, LMS, etc. to FST)
12		Not assigned
13-20	10:44:12	Current time of the FST

7.4 Information texts

When triggering actions in the FST menu, information texts may appear in the display. They contain information on the result of the respective action.

Display	Description
!! EMERGENCY OPERATION !!	The controller is in emergency mode. Drives are not possible. Emergency operation is activated by pressing the S key while switching the system on.
ADM STUCK:	Landing call button mechanically or electrically stuck. The call is detected but not placed.
ADM unconfigured!	A land call module connected to the shaft bus is not configured. Inform NEW LIFT service line!
DRIVE NOT READY	Inverter "Ready" signal does not arrive via the DCP interface within 0.5 seconds.
DRIVE INHIBIT ON!	Mutual start-up blocking via the LMS bus is active. Starting will be delayed until the other networked systems have completed their acceleration phases.
ARM SW UPDATE ERROR	Software update for the "ARM" drive processor failed. Repeat update procedure. Otherwise inform NEW LIFT service line!
Landing call button stuck: 03/A Car-call button stuck: 02/B	The landing call from the specified floor and door side is permanently activated (is stuck). The message is repeated every minute until the error has been corrected.
PLEASE WAIT...	The triggered action has not been completed. Please wait!
DIR NOT FOUND!	Update file directory on external memory medium not found. Update file "xxxxxxx.tar" must be located in the "update" folder.
DIR NOT OPENED!	Update file directory could not be opened. Check update file and directory.
UNPACKING FAILED	Unpacking the ".tar" file failed. Check update file; the file may be defective.
FANG RESET ACTIVATED	Default function with FST-3 "on board". Action triggered via the "FangReset" test menu. Relay K38 controls the reset coil of the speed limiter. This can also optionally be performed via an I/O port.
ARREST TEST RUNNING...	Activation of "FangTest-Automatik" via the test menu. Arrest floor and offset are to be set under Main Menu/ Config/Installation/. After activation, keep "Enter" pressed down.
FAX/SMS SENT OK!	A status fax was sent successfully via the modem interface.
FAX/SMS -> GST!	A fax/sms (text message) is sent to the group controller where it will be sent via the FAX-modem.
FEH_LIST TRANSFER ER	Transfer of the FST error list (xxxxx.txt file) faulty.
FEH_LIST TRANSFER OK	Transfer of the FST error list (xxxxx.txt file) triggered via Main Menu/System/Copy to/Error List-> USB successfully completed.
FILE NOT FOUND!	The inserted PC-Card does not contain the file(s) required for the triggered action.
FST Software Update	An FST software update with a USB 2.0 memory medium is being performed. The progress is displayed in %.
GST UPDATE COMPLETE!	The software update of the GST Group Controller has been completed successfully.
ZONE IS INCORRECT!	The zone measured during the learn drive is too long (max -300mm to +300mm)

Display	Description
Calibration abort!	The calibration drive was aborted. Check function of connected drive speeds. Locate reason for drive abort in the error list.
NO <TC> SIGNAL!	The car is on the top floor and the top correction signal is missing (only incremental positioning). Check function of TC switch. Check settings in MAIN MENU / Positioning / Increm. Positng. / TC/BC-Level.
NO <BC> SIGNAL!	The car is on the bottom floor and the correction bottom signal is missing (only incremental positioning). Check function of BC switch. Check settings in MAIN MENU / Positioning / Increm. Positng. / TC/BC-Level.
CONFIG TRANSFER ERR!	An error has occurred during copying of the controller configuration.
CONFIG TRANSFER OK!	Controller configuration copied successfully.
CONFIG(D) CORRUPT!	A parameter of the drive configuration is not plausible. Change a parameter in MAIN MENU / Drive and undo the change again. The information text disappears after saving the settings.
CONFIG(S) CORRUPT!	A parameter of the system configuration is not plausible. Change a parameter in MAIN MENU / Config and undo the change again. The information text disappears after saving the settings.
LCS OFFSET DELETED	All currently active weight offsets are deleted by the Main Menu/Config/Weight Sensor/LCS Settings/Auto Adjust/LCS Reset parameter.
LCS (L1) calibrated!	The LCS empty load measurement was performed.
LCS (L2) calibrated!	The LCS reference load measurement was performed.
(L1/L2) calibrated!	Re-calibration was performed. Activation via Main Menu/ Config/Weight Sensor/LCS Settings/Correct Offset
LON INTERFACE ERROR	Sent or received data of the LON bus are faulty or completely missing LON bus communication
RESET LON	After "LON INTERFACE ERROR", restart of the LON controller
LON INTERFACE OK!	LON controller OK after "RESET LON" (restart)
LEARN DRIVE FAILURE!	The started learn drive was not successful. Check function of signals zone B, bottom correction (BC) and top correction (TC). Locate reason for drive abort in the error list.
LEARN DR. START FAILURE!	The started learn drive was aborted due to the car not moving even with pre-selection active.
DRV-TEST STARTED!	A DRV test was triggered.
DRV-TEST FINISHED!	The DRV test was not completed successfully.
CAR NUISANCE DETECT!	The car nuisance protection function has triggered. See MAIN MENU / Config / Anti Nuisance.
NOT SENT! [FAX/SMS]	Transmission of a status fax via the modem interface was aborted. Check modem and telephone connection. MAIN MENU / Config / Modem/Fax/LMS
NOT IN THE ZONE!	The started learn drive cannot be performed because the car is not in the door zone of the lowest floor. Check function of zone B signal and settings in MAIN MENU / Positioning / Increm. Positng. / ZoneB-Level.
NOT IN FLOOR-0!	The started learn drive cannot be completed because the car is not on the bottom floor (check bottom correction switch, BC).
NOT FROM THIS FLOOR!	The car is at an end floor. The end switch test cannot be started from this floor.
EMERG.-CALL PRESSED	An emergency call button was pressed or is defective (see wiring diagram).

Display	Description
ONLY FROM END FLOOR!	The triggered DRV test can only be started from an end floor.
REC. ALREADY STOPPED	Repeated execution of the Main Menu/System/Recorder/Recorder STOP parameter even though it was already stopped.
RECORD TRANSFER ERR!	Copy operation of the record file faulty.
RECORD TRANSFER OK!	Copy operation of the record file successfully completed.
RECORDING RE-START!	An already-started recording was restarted.
RECORDING STOPPED!	Recording was stopped.
RECORDING NEW START!	Recording is restarted.
SD CARD REMOVED	An SD card was removed.
SD CARD OK	The inserted SD card is OK.
UNKNOWN SD CARD	The inserted SD card is unknown.
KEYPAD LOCKED	Keypad of the FST locked. Unlock with the "S" button.
KEYPAD UNLOCKED	Keypad of the FST unlocked.
TRANSFER RUNNING!	Data transfer to external USB memory medium.
UCM-A3 TEST...	A UCM-A3 test was triggered in the up or down direction in the test menu.
UNKNOWN DIR ERROR	Directory on external memory medium cannot be read or cannot be found.
UPDATE COMPLETE!	The software update of the LON modules was completed successfully.
USB stick REMOVED	A USB was removed from X41.
USB stick PLUGGED IN	A USB stick was plugged into X41.
USB stick OK	The USB stick that was plugged into X41 is detected by the FST-3 controller.
USB stick UNKNOWN	The USB stick that was plugged into X41 is not detected by the FST-3 controller. Only USB 2.0 sticks with FAT32 formatting and maximum size of 32GB are to be used.
*** WARNING ***	General warning notice scroll text; in connection with various plain text messages.
WAITING TO RESET...	Automatic Reset after changing a basic parameter (e.g. Drive type). This may take a few seconds.
Over- SLIPPAGE!!	During the last drive of the learn drive, hysteresis of the connected magnet switches TC, BC and zone B was detected (only incremental positioning). This message appears if the result of the measurement is greater than 10 mm. Hysteresis will then automatically be limited to 10 mm.
DOOR-NUDGING!	Nudging (forced closure) of the car door is active. Light barrier and reversing contacts are ignored. See MAIN MENU / Doors / Doors-Selective / Light barrier and MAIN MENU / Doors / Doors-Selective / Nudge Time.

Display	Description
S2-SHK-RELAY OPEN	The "SHK relays" between terminals X14:8 and X22:2 (X25:1 andX25:2) of the S2 are de-energised. The power supply to the brake, motor, valves, etc. is interrupted. The reason for the interruption can be found in the guide menu under S2 monitor in the column "SHK".

S2 installation mode ON	Installation mode of the S2 was switched on in the S2 Commissioning menu. A drive without magnetic tape or sensor is possible if no positions have previously been "taught". This mode is required for the teaching of the end switches, the inspection end switches and the end floors.
S2 installation mode OFF	The installation mode of the S2 was switched off.
S2 teach mode ON	Teach mode of the S2 was activated in the S2 Commissioning menu. A drive for "teaching" the floors is possible. Teach mode prevents normal operation, because the landing calls are blocked.
S2 teach mode OFF	The teach mode of the S2 was switched off.
S2 error reset	An S2 error reset is being performed.
TEACH/INST. FAULT	Installation mode and teach mode are active. Faulty operation → Only one of the two modes is possible!
HOLD FK RESET...	RESET (key) button S256 is actuated. The access monitoring for the car roof (FK) / shaft head (SK) is currently being reset. For a successful RESET, the input must be active for approx. 3 seconds. Press S256 until the display HOLD FK RESET... disappears.
RESET FK OK	RESET procedure for the resetting of the access monitoring for the car roof (FK) / shaft head (SK) successfully completed.
RESET FK Error	RESET procedure for the resetting of the access monitoring for the car roof (FK) / shaft head (SK) not successfully completed! RESET (key) button S256 actuated too briefly or too long. Press the button until the the message HOLD FK RESET... disappears from the display.
HOLD SG RESET...	RESET (key) button S256 is actuated. The access monitoring for the shaft pit (SG) is currently being reset. For a successful RESET, the input must be active for approx. 3 seconds. Press S256 until the display HOLD SG RESET... disappears.
RESET SG OK	RESET procedure for the resetting of the access monitoring for the shaft pit (SG) successfully completed.
RESET SG Error	RESET procedure for the resetting of the access monitoring for the shaft pit not successfully completed! RESET (key) button S256 actuated too briefly or too long. Press the button until the the message HOLD SG RESET... disappears from the display.
S2-ERR HOLD RESET	An S2 RESET is currently being performed.
S2 ERR RESET OK	RESET procedure of the S2 successfully completed. Important! After an S2 RESET is performed, the resetting/activation of the access monitoring is required, even if this is not being used in the lift system! Therefore, S256, S256 or S207 must be actuated!
S2 ERR RESET ERROR	RESET procedure for the S2 RESET not successfully performed!
SHK Open:Can't Drive	S2 SHK RELAY OPEN is open – that is why the S2 is not ready for movement. The reason for the interruption can be found in the guide menu under S2 monitor in the column "SHK".
S2-COMMUNICAT. FAIL	CAN-BUS connection between FST and S2 interrupted. Check the plugs/cables X10 on the FST-3 and S2.
S2-EMERG. END SWITCH	The "emergency end switch" position has been reached. Direction is indicated with arrow UP or arrow DOWN. Error reset via FST test menu → Fault reset

S2-TAPE SW. ACTIVE	The tape switch has triggered. No 24 VDC at terminal X50:11. The magnetic tape is to be checked for correct fitting and presence. Operating the S2 / lift system without a functioning tape switch is prohibited! The error is not locking, but the tape switch itself is latching. Prior to a reset, a check of the tape, bracket, etc. must be performed.

S2-TEST START FAIL	Test of the start sequence failed. Perform an S2 reset. If errors persist, consult with the NEW LIFT service team.
S2 EXCESS SPEED TEST...	Manual triggering of the Over- speed test. *see TEST Over-speed pre-triggering (115%), page 100*
S2 SPEED LIMIT TEST...	Manual triggering of the speed limiter test. *see TEST S2 speed limiter (125%), page 101*
S2 DECEL. VP TEST...	Manual triggering of the test for the deceleration control circuit for the "virtual buffer" (VP). *see Stage 1 procedure, page 102*
S2 DECEL. RP TEST...	Manual triggering of the test for the deceleration control circuit for the "real buffer" (RP). *see Stage 2 procedure, page 103*
S2 PRETRIG TOP TEST...	Manual triggering of the test for the pre-triggered stopping system TOP. *see 9.5.13 Checking the pre-triggered stopping system protected space version (commissioning step 20), page 104*
S2 PRETRIG BOT TEST...	Manual triggering of the test for the pre-triggered stopping system BOTTOM. *see 9.5.13 Checking the pre-triggered stopping system protected space version (commissioning step 20), page 104*
S2 UCM TEST...	S2 UCM test running. *see 9.6.3 Checking unintended movements (UCM) (commissioning step 25), page 109*
IGNORE S2 EMERG STOP...	Manual triggering of a test command for the FST for ignoring drive abort commands of the S2. Required for tests on the rupture valves.
ERASE POSITIONS OK!	Deletion of the taught positions successfully completed. Configuration/Installation/S2-System/Teach menu/Erase all S2 pos. For deletion, installation mode must be activated.
ERASE POSITIONS ERR!	Installation mode not activated for deletion.
INST/TEACH ON FAILED	The installation or teach switch was not activated for a menu action.
S2-CODE ACCEPTED	The configuration code for the trigger speed or deceleration constant was accepted.
S2-COMMAND WRONG	Consult with the NEW LIFT service team.
S2-CODE WRONG	The configuration code for the trigger speed or deceleration constant was not accepted.
S2-INSTAL.MODE OFF!	Installation mode must be active for the transmission of the configuration code.
Attention! S2 configuration for trigger speed missing! -> Configuration/ Installation/S2 system/Cfg. trigger speed/ XXXXXXXX Confirm the code with Enter!	This prompts the lift engineer to perform an action to configure the S2 for the trigger speed, *see Check the set speeds of the frequency inverter or similar with the system data.Setting and checking the safety parameters of the S2 system (commissioning step 3), page 73.*
Auxiliary mode not active!	For an S2 reset as well as activation/deactivation of installation mode and teach mode, the auxiliary mode control must be switched on.
Auxiliary mode switched off!	Confirmation that auxiliary mode has been switched off for S2 reset, installation mode or teach mode.
Serial number incorrect!	Handshake between FST-3 and S2 has failed, restart the FST-3 and S2; if the error message appears again, contact NEW LIFT
Confirmation key (SN key) incorrect!	Handshake between FST-3 and S2 has failed, restart the FST-3 and S2; if the error message appears again, contact NEW LIFT

Timeout (when waiting for auxiliary mode OFF)!	If the auxiliary mode control for S2 reset, installation mode or teach mode is not switched off within 15 seconds, the error message appears.
Internal error!	Handshake between FST-3 and S2 has failed, restart the FST-3 and S2; if the error message appears again, contact NEW LIFT
Conditions for secure command not met!	Handshake between FST-3 and S2 has failed, restart the FST-3 and S2; if the error message appears again, contact NEW LIFT
Timeout (when waiting for confirmation)!	Handshake between FST-3 and S2 has failed, restart the FST-3 and S2; if the error message appears again, contact NEW LIFT
Conditions for secure command no longer met!	Handshake between FST-3 and S2 has failed, restart the FST-3 and S2; if the error message appears again, contact NEW LIFT

7.4.1 Information page

The information page contains important information on the individual configuration of your FST controller.

It can be accessed with key combination Shift+Enter and closed with Enter. ▲ and ▼ are used to navigate within the information page.

```
- - FST INFORMATION
- - -
HW Ver.  :FST-3
SW Ver.   :V2.000-0180
        :12/12/2023
```

Messages in lines B, C and D

Display	Description
HW Ver. : FST-3	Hardware version of the FST board
SW Ver. : V2.000-0180 : 01/06/2023	Software version with release date
Boot Ver : 1.3.4.13	Software version of the operating system
DRV Ver. : 0180	Software version of the drive system
FSM Ver. :	Software version of the FSM car top control module. If no software version is displayed here, there is no bus connection to the FSM.
FPM Ver. :	Software version of the FPM car operating panel module. If no software version is displayed here, there is no bus connection to the FPM.
LiftID:A	Internal identification of the controller. The ID displayed here must correspond to the jumper settings on the FSM and FPM.
MAC.. 1C:35:F1:0A:06:83	Hardware address of the FST as unique identifier for the network connection
Neuron-ID.. 07 00 05 90 0B 01	Unique ID for identification of the FST
Installation ID. 64-etage-simulator	System location or name
NEW-Factory No. XC230815/2023	Order number of the individual lift system
Mem:12936 Cach.1404	Free "memory" and currently used "cache" memory of the FST

Display	Description
Start:01/08/23 12:00	Date and time of the last activation
Cal :27/05/23 15:27	Date and time of last calibration drive
Stats:07/08/23 09:44	Start date and time of the current statistics recording
Cfg :01/08/23 12:06	Date and time of the last change of a parameter in the FST menu
CfgBk:23/06/23 00:57	Date and time of the current bacbcp in the internal buffer
Err :25/06/23 03:45	Date and time of the last error list reset
Sec.Level:2	Active security level of the FST
--GST INFORMATION ---	Only occurs if FST is member of a group
GST SW :V2.080-0051 :08/08/2023	GST (group controller) software version with release date
Start:04/09/23 07:13	Date and time of the last activation of the GST

7.5 LEDs

The LEDs on the FST-3 and S2 controller indicate the system state.

7.5.1 LEDs of FST-3

LED	Colour	State	Reason	Action
F	Green	On	The power supply is on	
			The hardware of the FST controller is working correctly	
		Off	No power supply	Check the 24V power supply of the FST controller.
			The hardware of the FST controller is faulty	Contact the NEW LIFT service line
S	Green	On	The drive processor is working correctly	
		Flashing	Landing control OFF	◄ switches landing control back on
		Off	Fault in drive processor	Contact the NEW LIFT service line
I	Red	On	Drive not possible	Line B shows the reason of the error. A drive is only possible after the error has been corrected.
		Flashing	One or more errors were added to the error list	The ERROR LED switches off after the error list is called up
		Off	There is no error or event	

LED	Colour	State	Description
OUT	Green	Flashing	Outgoing data packets - LON bus
IN	Green	Flashing	Incoming data packets - LON bus

LED	Colour	State	Description
RJ45	Orange	Off / green	Speed = off 10Mbps ; on 100Mbps
RJ45	Green	On / flashing	LAN connection / data traffic

LED	Colour	State	Description
Bluetooth	Green	On	Data / extended data mode (EDM)
Bluetooth	Orange	On	Command mode
Bluetooth	Violet	On	Connecting
Bluetooth	Blue	On	Connected

LED	Colour	State	Description
USB	Green	On	USB port active

LED	Colour	State	Description
Star	Orange	On	Neuron service PIN

LED	Colour	State	Description
HSG power	Green	On	24V voltage from emergency power supply present

LED	Colour	State	Description
Emer-gency call loop	Red	On	Emergency call loop is interrupted

LED	Colour	State	Description
K17	Red	On	Collective error message (relay) active

7.5.2 LEDs of S2

LED	Colour	State	Description
FST CAN	Green	Flashing	CAN bus activity

LED	Colour	State	Description
Sensor	Green	Flashing	LIMAX sensor (encoder) activity

LED	Colour	State	Description
Status	Green	Flashing slowly	Normal operation
Status	Red/green	Flashing slowly alternately	Teach mode
Status	Red/green	Flashing slowly alternately	Installation mode
Status	Green	Permanently on	Start
Status	Red	Permanently on	Error

8 Installation work

This section contains important information regarding installation procedure, installation conditions and settings of the NEW *LIFT* components. On-site circumstances may require an installation procedure that differs from the one suggested here.

The FST-3 fieldbus controller is delivered with the LIMAX33R shaft positioning system from Elgo.

The FST-3 can be operated only with this shaft positioning system.

8.1 Installation procedure

NEW *LIFT* recommends performing the installation work according to the following flow chart.

The FST-3 fieldbus controller consists of various modules and cables. The controller is only operational with all modules and cables.

First, mount, connect and adjust all NEW *LIFT* components necessary for commissioning the car. "Installation drives" are performed with the car in order to mount the NEW *LIFT* components located in the shaft, e.g. shaft positioning system, LON bus, etc. The FST-3 controller is then commissioned (see *see 4 Commissioning table, page 26*).

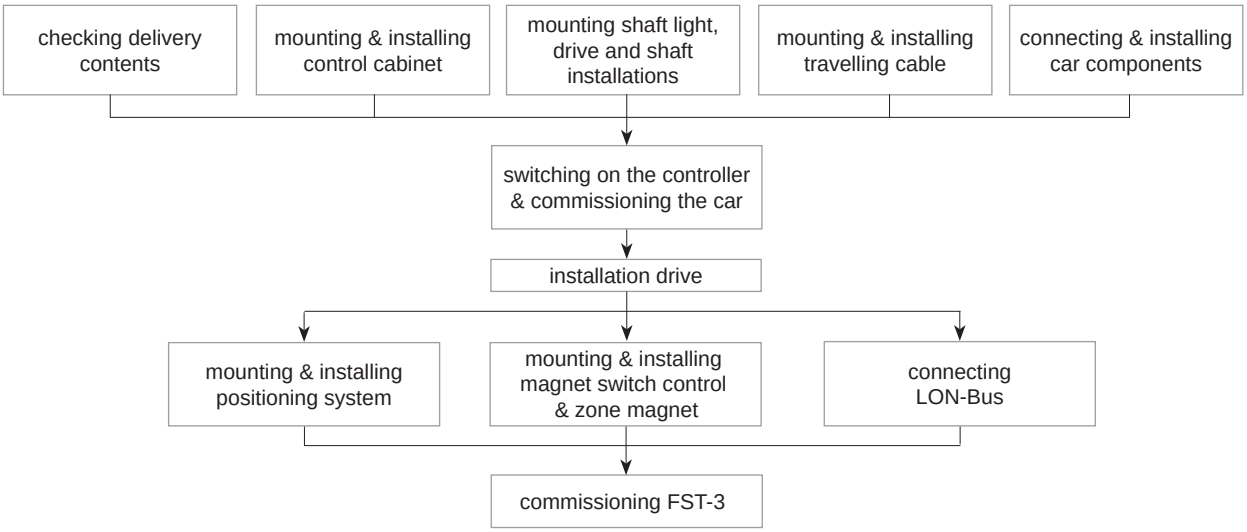

Recommended installation procedure for NEW LIFT components

8.2 Installing and wiring the system

8.2.1 Checking the delivery contents

- ► Check the components packaged in the delivery contents against the shipping note to ensure that all items are present.
- ► Check packaged components for transport damage.
  If required: Report any transport damage immediately to the carrier or parcel service.
- ► Check unpacked components are intact.
- ► Check that all cables are present and of the correct length.
- ► Check magnetic tape length fits the shaft height.
- ► Check magnetic tape holder version (straight or angled).
- ► Check magnetic tape holder assembly kit is complete.
- ► Check sensor bracket assembly kit is complete.
- ► Wiring diagrams, bus diagram and documentation

- ► Control cabinet or mounting plate with integrated FST-3 controller
- ► Electronic assemblies according to bus plan
- ► Prefabricated LON bus cables according to bus plan
- ► Prefabricated flat travelling cable according to bus plan
- ► Terminal resistors (terminators) according to bus plan
- ► FST quick guide (usually fixed in the control cabinet)
- ► FST-3 Installation & Commissioning manual (this document)
- ► Wiring diagrams incl. bus plan
- ► Other components according to wiring diagram
- ► are the LON bus cables and the flat travelling cable of the length specified in the bus plan?
- ► Check if stickers are present and correctly configured.

Reordering NEW *LIFT* components

Designations, quantities, lengths as well as the factory number are given on the shipping note or in the wiring diagram.

In the event of complaints:

- ► If components are missing, contact the NEW LIFT service line or customer service immediately.
- ► Keep the following information ready for reorders:
- ► 8-digit NEW LIFT factory number, e.g.: XC234711
- ► Designation of the missing NEW LIFT component
- ► Type and length of missing cable
- ► Your phone/fax number or e-mail address so we can contact you if necessary.

8.3 Control cabinet

Installing the control cabinet

Move the control cabinet to the planned installation location and install it. The type of mounting brackets to be used depends on the installation location and the weight of the control cabinet and is to be selected by the lift engineer.

The planned installation location can only be changed in exceptional cases, as the length of the prefabricated cables might not be adequate. Please inform the NEW *LIFT* service line so a solution can be found.

Connecting the control cabinet

The cable cross sections of the supply, drive and ground lines depends on the power rating of the control cabinet and must be obtained from the included wiring documentation.

Electric hazard due to live wires and parts. Risk of death or serious injury.

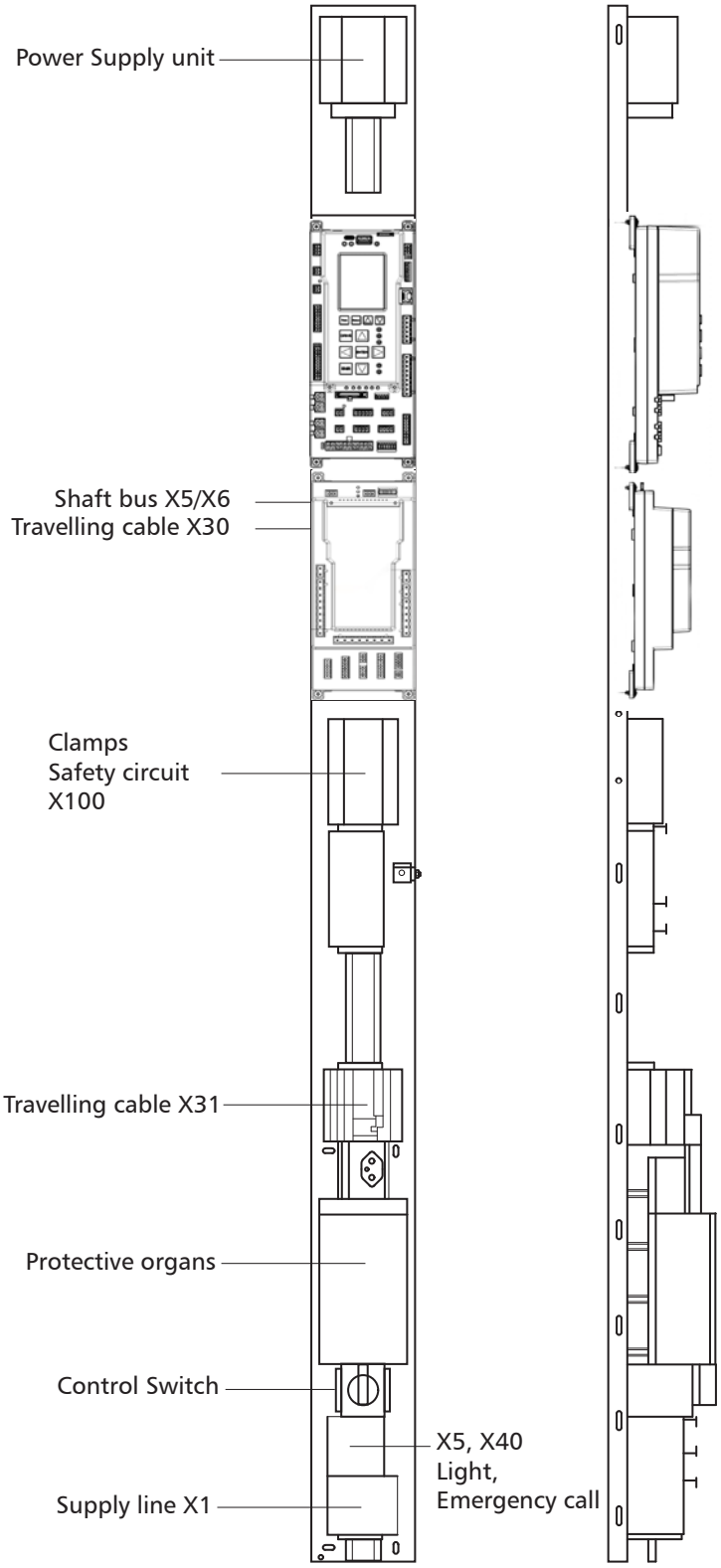

Mounting plate for "frame controller" FST-3

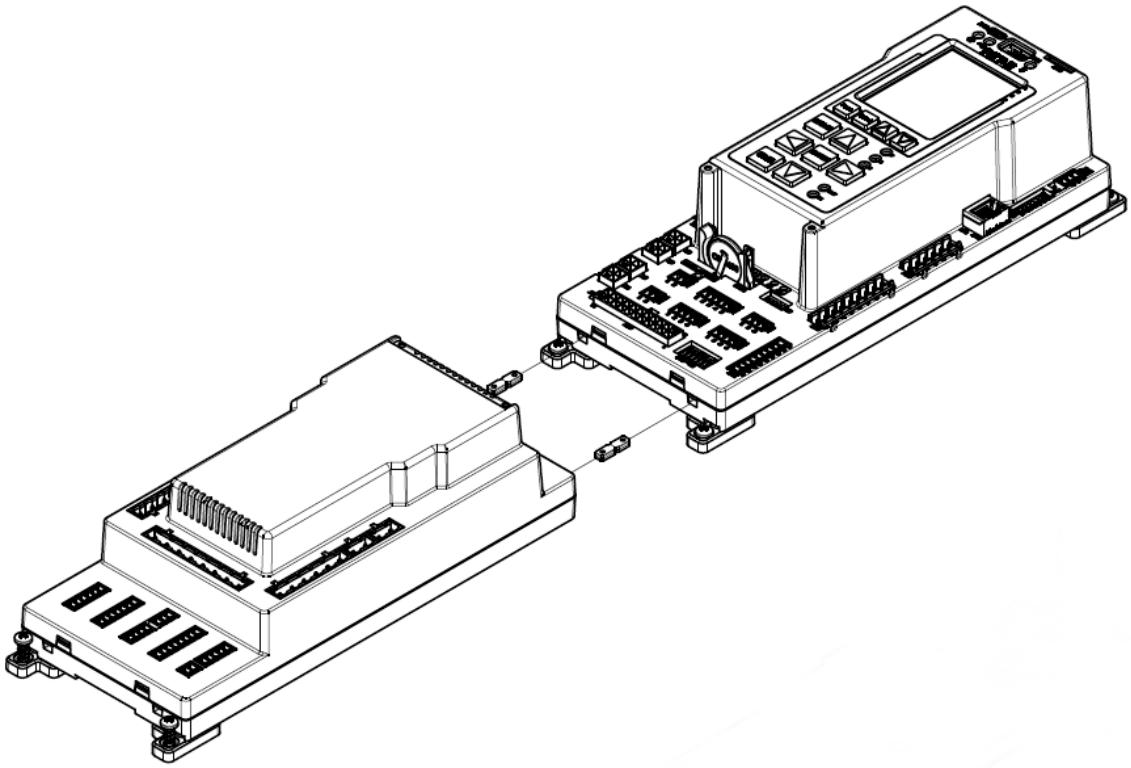

Possible installation view of FST-3 + S2 screwed

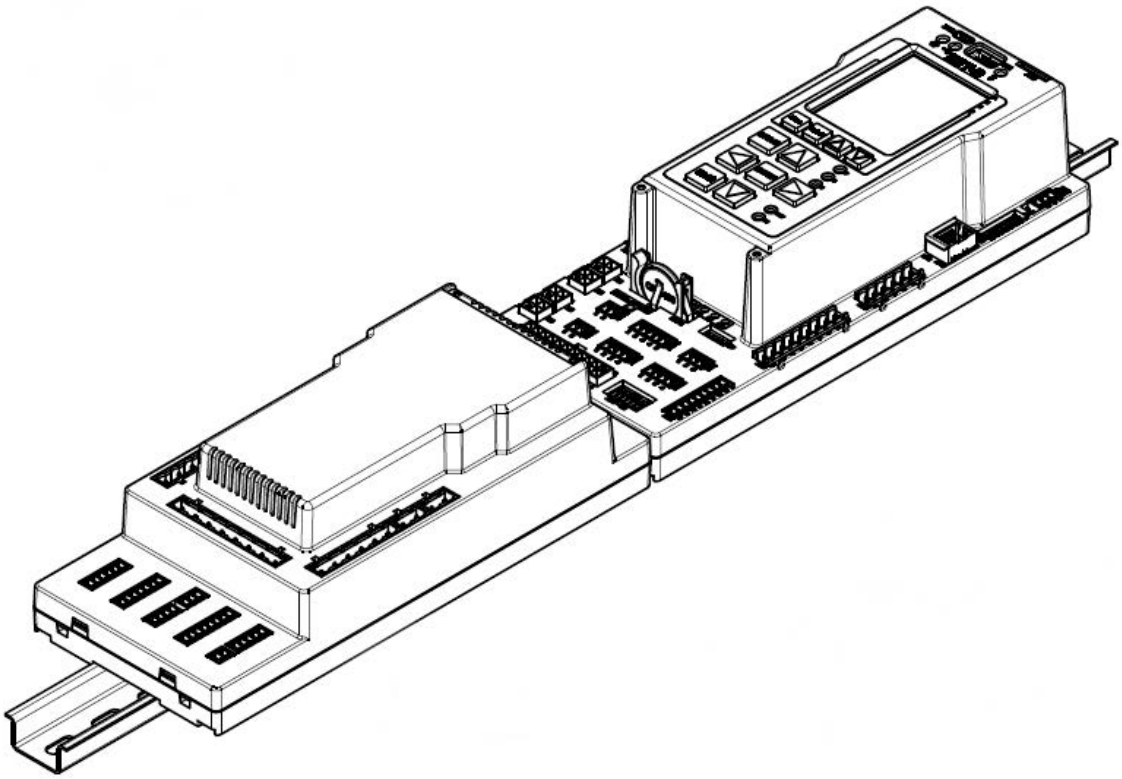

Possible installation view of FST-3 + S2 on rail

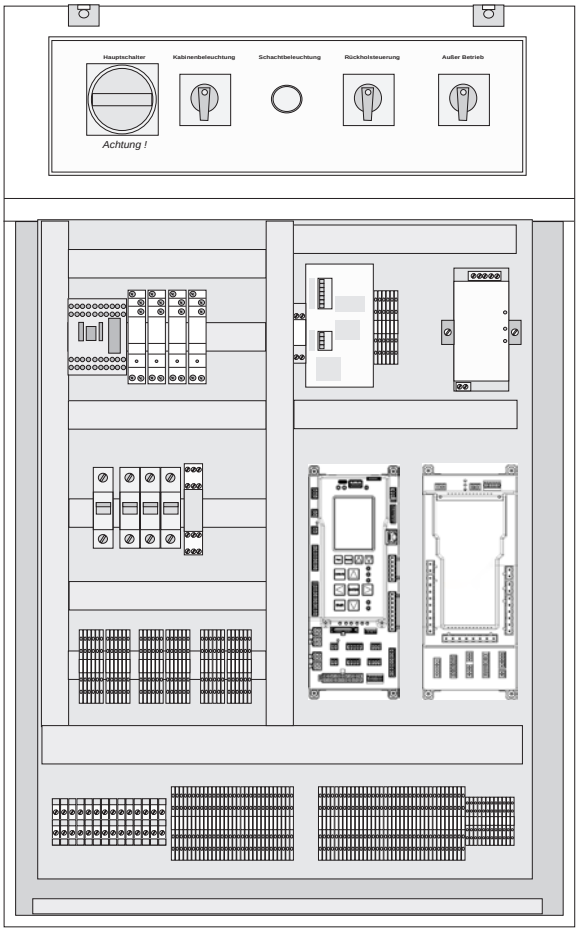

Possible control cabinet for FST-3 controlled cable lift

Potential grounding must be carried out in accordance with applicable regulations and guidelines (VDE, DIN, EN and ISO) depending on the power rating.

The neutral and earth wires must be routed separately!

All cables and wires must be secured with sufficient strain relief.

Connections according to the wiring diagram

Before commissioning the control cabinet, the following connections must be made according to the wiring diagram:

› Supply
› Drive
› Lighting
› Safety circuit

Customer wiring is shown in dashed lines in the wiring diagrams, factory wiring is shown in solid lines!

Connecting the electronic voltage to ground

There is a permanent connection between PE and ground in the control cabinet, normally located next to the power supply "G2". This central connection of both potentials must be permanent, except when measuring the isolation. A yellow notice in the respective national language identifies this connection. Make certain that the notice is visible as soon as the control cabinet is opened.

Measuring the isolation

While measuring the isolation, make absolutely certain that no connection exists between the earth wire (PE) and controller negative (GND)! While measuring the isolation, also ensure that there is no electrical connection between the measuring equipment and the electronic components during the measurement of the installation. All warranty claims against NEW*LIFT* are otherwise rendered void.

If a PE-GND connection exists while performing an isolation measurement, there is a risk that the testing voltage of the measuring equipment will damage electronic components of the controller as well as other components, such as frequency inverters, door controllers, etc.

Technical data of control cabinet FST-3 and mounting plate FST-3 (reference value for standard control cabinets and mounting plates)

Power rating

The power rating depends on the power rating of the drive and the travel height of the lift and is, thus, different for each system.

Weight

The weight of the control cabinet depends on the dimensions and on the power rating.

min: 50 kg
max: 200 kg

Weight of the assembled mounting plate for the FST-3 controller

min: 8 kg
max: 11 kg

Safety clearances

The safety clearances specified in EN 81 must be observed, even with the control cabinet door open

8.3.1 Checking the general requirements of the lift system

The installation and wiring vary depending on the customer's system and must be tailored accordingly. The system is prepared by NEW *LIFT* largely as a plug-and-play system:

› The FST control cabinet is installed and the corresponding voltage supply is connected.
› The drive system (motor or hydraulic unit, brake or valves and their feedback contacts or soft starter, etc.) has been wired and is ready for operation.
› The safety circuit is closed up to the S2 safety system safety system (*see system wiring diagram*).
› An optionally available safety brake or anti creep device has been wired and is operational.

If a feedback contact of an SBR or ABS is present:

► Connect the NC contact (idle state); otherwise the S2 safety system will go into fault.

If no SBR or ABS is present, two relays or contactors installed in the FST control cabinet simulate the signal. These relays or contactors are always present by default.
For connection, see next chapter or system wiring diagram.

The contacts of the contactors and relays must be positively driven!

› Safety gear speed limiters are installed and checked for function.
› Folding supports for protected space creation for the shaft pit or shaft head are installed and wired. If no folding supports are required:

► Make sure that all required contingency measures for the safety of the lift engineer are active during installation.

› Contingency safety measures (if required). When planning the system, you must define which contin-

gency measures are necessary for commissioning.

› Buffers at the shaft ends and the folding supports are installed and designed for the system speed.

8.4 Travelling cable

The suspension brackets for the flat travelling cable are installed in the shaft and the travelling cable hung.

Note:

› The turning point of the flat travelling cable is at half the travel height + 1m

› Minimum bending radius of PVC cable = 500 mm; minimum bending radius of halogen-free cable = 500 mm

The travelling cable is connected according to the wiring diagram to terminals FST X30 and X31, and to the control cabinet socket X31.

The control cabinet PE cables must be fastened to the provided earth bolt!

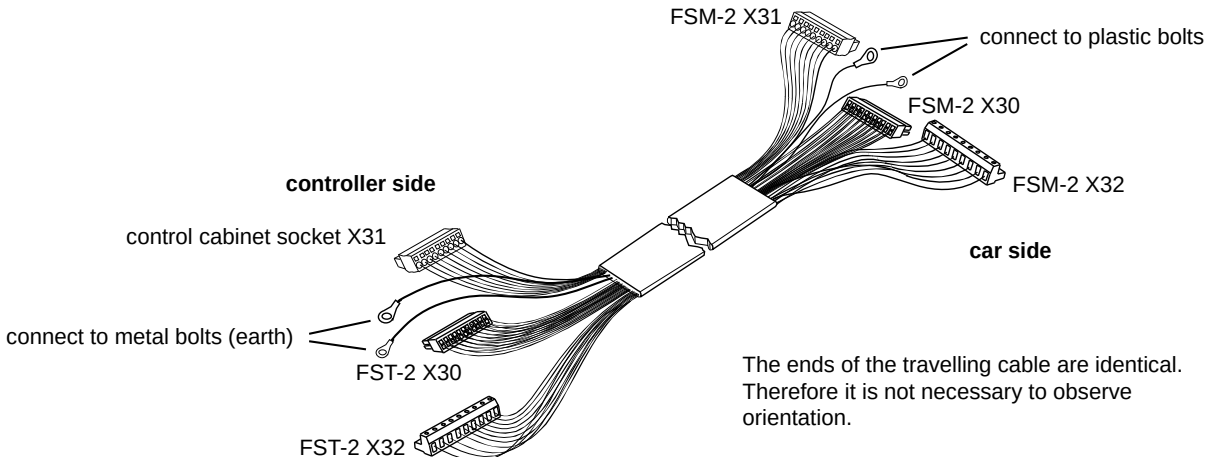

Flat travelling cable

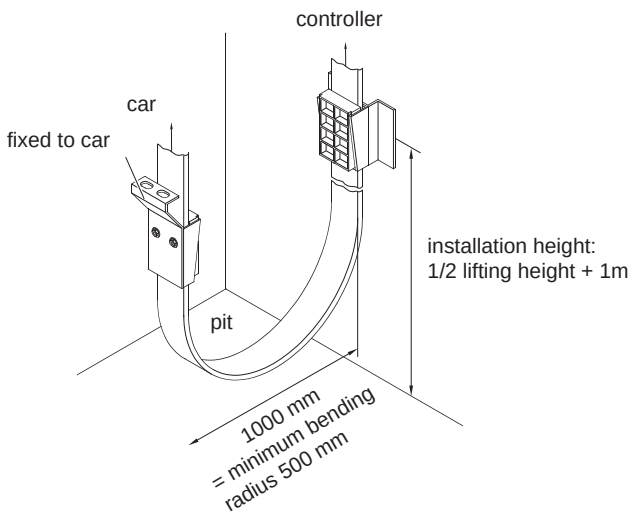

Installation example of flat travelling cable in the shaft

8.5 Car components

8.5.1 Car top box

Installing the car top box

The installation location of the car top box on the car roof must be specified on-site. The following criteria must be observed:

› Easy access for later wiring work
› Protective space on the car roof according to EN81
› Proximity to main components door drive, car operating panel, weight sensor, etc.

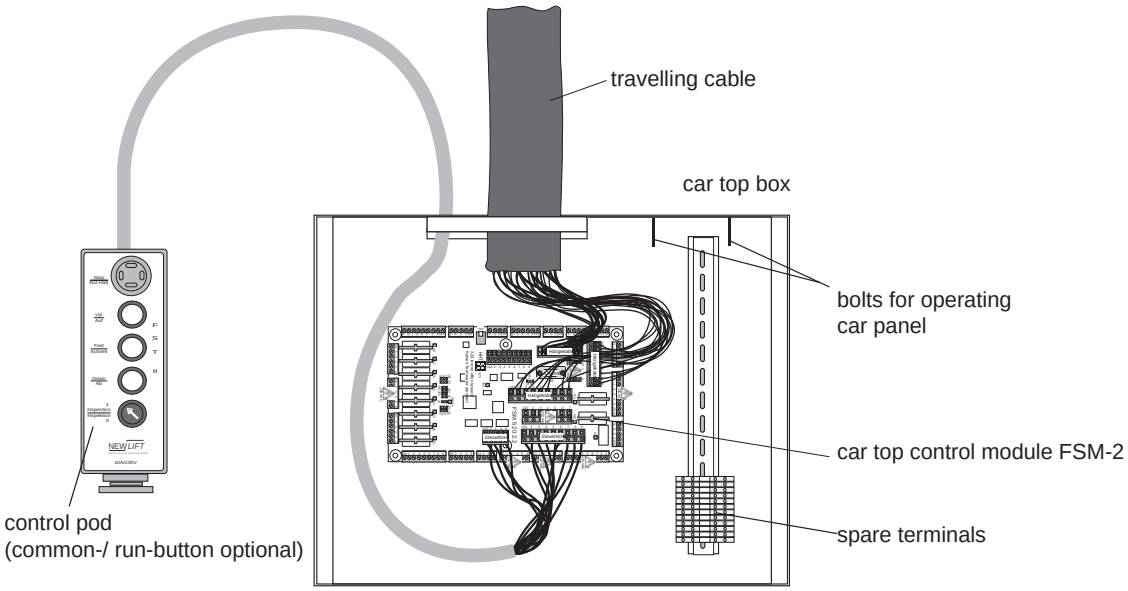

Car top box

With grouped lifts, each car top box is assigned to a specific control by default! Before installation of the car top box, check conformity by means of jumpers FPM-2 and FSM-2 (*see 10.3.1 FSM-2 jumpers, page 143, see 10.4.1 FPM-1 jumpers, page 149* **and** *see 10.5.1 FPM-2 jumpers, page 152****).***

Notice on the activation of the door relays/contactors!

Except for door drives for which switching off must occur by means of excess current or similar directly at the contactor coil (OPEN/CLOSE), NEW LIFT recommends always connecting the door end switches without switching off the coil voltage of door relays K2, K3, K7 and K8. Therefore, jumpers J21, J31, J71 and J81 are to be plugged into 2-3. The OPEN/CLOSE relays of both doors are, thus, permanently connected to 24VDC. PIN 1 is thereby active for the OPEN or CLOSE response from the respective door. Prerequisite is that YES be set under

`Main Menu/Doors/Doors-Selective/Endswitches.`

8.5.2 Car components

Electric hazard due to live wires and parts on the FSM-2. Some terminals of the FSM-2, such as car lighting, shaft light button and emergency lighting are live even after switching off the main switch.

Check and secure unpowered state and perform installation work on electrical components in switched off and unpowered state.

Requirements

› Car installation complete
› Connected travelling cable
› Functional safety circuit
› Unassigned bus inputs and outputs are terminated
› Neither inspection nor auxiliary mode is switched on in the lift control system

Checking the EMERGENCY-STOP switch of the car top control pod

► Press the EMERGENCY-STOP switch on the car top control pod.
► Line A of the FST-3 screen displays `EMERGENCY STOP CAR`.If not, there is an installation fault that **must** be corrected.
► Release EMERGENCY STOP switch locking mechanism.

Line A of the FST-3 screen displays `CLOSED`.

The inspection control has priority over the auxiliary mode, i.e. an inspection drive is possible while the auxiliary mode is switched on.

Owing to different installation procedures, the sequence in which the installation process as well as the connection steps for the car-call button panel, door drive, emergency call, load measurement device are performed may vary.

FSM-2 car top control module

The FSM-2 car top control module is mounted in the car top box on the car roof. The travelling cable is now connected to terminals FSM-2 X30, X31 and X32. The two shield connectors are connected to the plastic bolt in the car top box.

The earthing of the car takes place via the PE cable installed in the connector of socket FSM-2 X31. When working, this connector must be connected first and disconnected last.

Connecting the car top control pod

The car top control pod is secured on a metal part of the car roof by its magnetic surface.

The car top control pod is connected to the car top control module using FSM-2 X21 and FSM-2 X22. The connected car top control pod remains on the car roof after commissioning.

Connecting door control

The door control is connected to the FSM-2 car top control module according to the wiring diagram.

Function of the door end switches is set on the FSM-2 using jumpers J21, J31, J71 & J81!

› Door drives that do not require an end switch for their function: set all jumpers to 2-3. No door end switches and no bridges must be connected.
› Door drives that require an end switch: set all jumpers to 1-2. Connect door end switches to the FSM-2 according to the wiring diagram.

Connecting emergency call buttons and emergency light

Connect all emergency call buttons as well as the emergency light to the FSM-2 according to the wiring diagram.

To safeguard the emergency calls against wire breakage, emergency call buttons with normally closed contacts are required!

Connect all emergency call buttons as normally closed contacts according to the wiring diagram. All emergency call button inputs not in use must be bridged at the FSM-2 or at the control cabinet!

6 W max. power consumption emergency lighting on the FSM-2:
The total power of all connected emergency lights must not exceed 6 W.

Other car components

All other 230V and 24V car components must be connected to the provided terminal strips in the car top box according to the wiring diagram.

Establishing bus connections

All bus modules of the car (FSM-2, FPM-2, EAZ, etc.) must be connected using the appropriate bus cables as specified in the bus plan.

8.5.3 FPM-1

Depending on the installation position and delivery, the FPM-1 is already situated in the car top box or in the car operating panel.

If the FPM-1 is installed in the car operating panel, it is connected to the FSM-2 (X12) by means of a bus cable (X1 socket).

If the FPM-1 is installed in the car top box, the car operating panel must be connected to the FPM-1 (X4) via the 50-pin sub-D connector.

Other components are connected via X2 according to the bus plan.

Adjusting the car doors

In single door mode, the car call buttons of the FPM-1 are assigned via the jumpers of one door side (A, B, or C). In dual door mode, the FPM-1 can process car calls for door sides A and B. Details *see 10.4.1 FPM-1 jumpers, page 149*. This is always incorporated into the car operating panel and is connected to the X11 socket of the FSM-2 (X12) via a bus cable. Further components are connected via X12 according to the bus plan.

8.5.4 Connecting the LON bus

Bus plan

All lift systems have various bus modules and cables. For configuring each lift control, a bus plan is supplied by NEW *LIFT* together with the wiring diagrams. All bus modules and their LON bus cables are shown in the bus plan.

The bus plan of the system is used

› for checking the delivery contents prior to starting installation (all modules and cables listed in the bus plan must be part of the delivery; verify correct number and length!)
› as an overview of the used bus module types
› as a connection overview for the bus modules

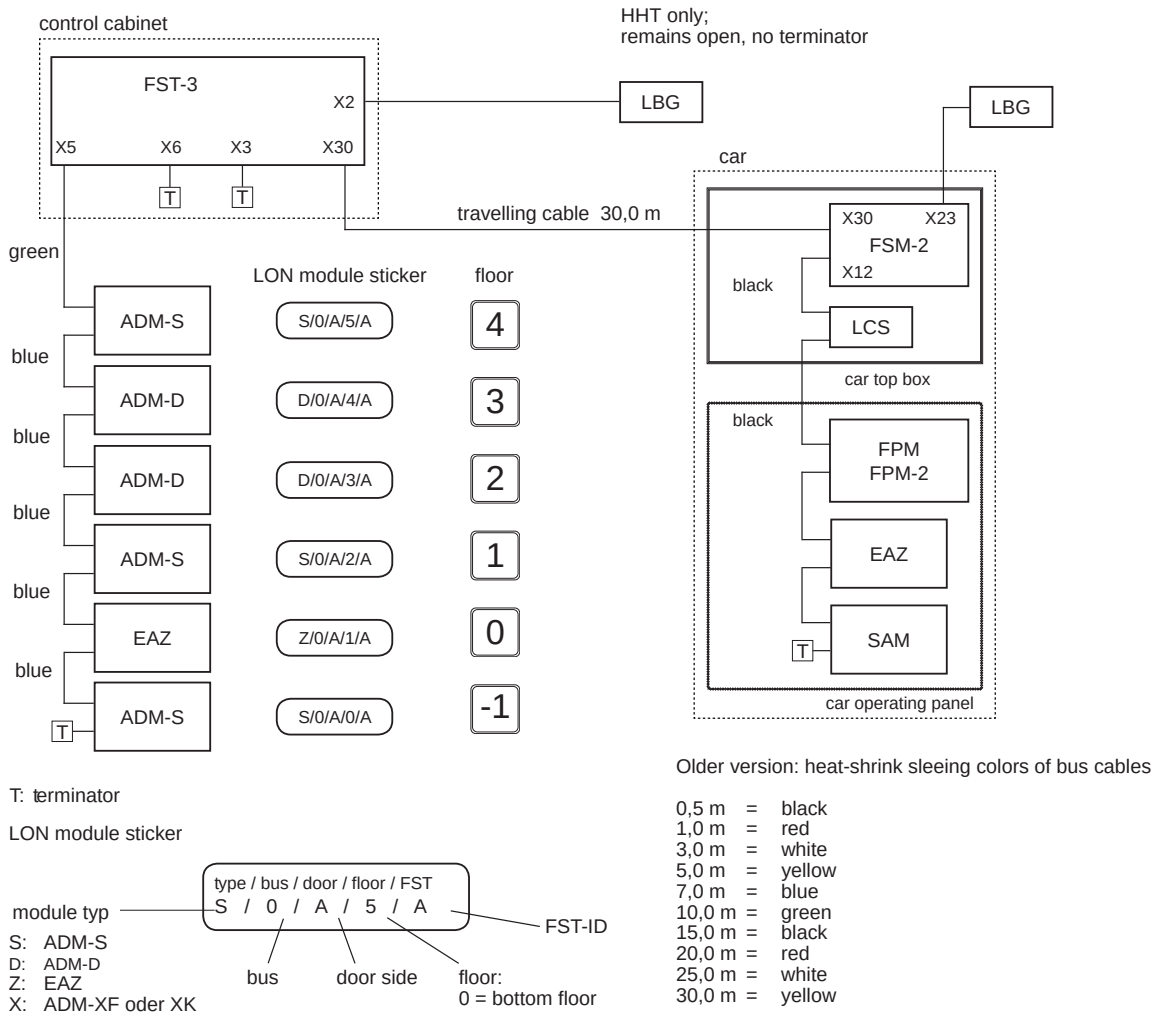

Bus diagram of FST-3 controller

The land call module (ADM) as well as some other components are labelled with stickers marking the exact installation location for the component. A copy of this information is also in the bus plan.

LON bus cables

The supplied LON bus cables are prefabricated to the correct length and have a plug-in connection. Length and number of cables must be in accordance with the bus plan.

The LON bus cables must be installed with suitable strain relief!

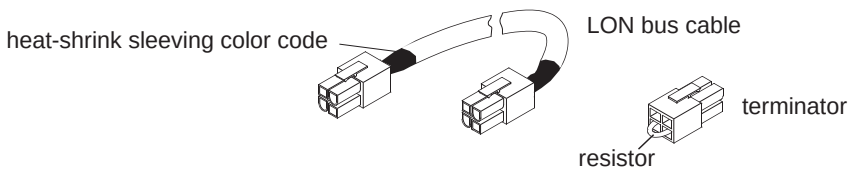

LON bus cables

Colour code of shrink tubing (alternatively, the length is imprinted)

Colour	Length
black	0.5 m
Red	1.0 m
white	3.0 m
Yellow	5.0 m
Blue	7.0 m
Green	10.0 m
black	15.0 m
Red	20.0 m
white	25.0 m
Yellow	30.0 m

Checking assemblies

Labelling of electronic assemblies must be in accordance with the details in the bus plan; likewise, the installation location must be the planned location. Assembly settings on the FST-3 controller can be modified at a later time, but this is time consuming.

Land call modules

The land call modules are mounted at their installation location either on stud bolts on the landing call panel or in housings in the shaft. The landing call panel components are connected to the land call modules and floor position indicators according to the wiring diagram. On delivery, the respective jumper assignment is set by default.

Connecting the LON bus

The ADM land call modules of the closest floor are connected to the FST-3 controller according to the bus plan. The LON bus is looped through from ADM to ADM and/or EAZ floor position indicator, the bus cable is installed in the shaft, and unassigned bus inputs and outputs are terminated with a terminal resistance (terminator).

Not terminated, open bus inputs and outputs can cause the FST controller to malfunction.

Preferably, the "incoming" bus cable should be connected to X1 (resp. X11 or X21) and the "outgoing" cable to X2 (resp. X12 or X22). From a functional perspective, this is not relevant. It serves only the purpose of tracking the bus cables.

9 Installation and commissioning

9.1 Connecting the lift components to the S2 (commissioning step 1)

Danger of falling! Risk of serious injury or death!
Until commissioning is complete, conventional safety precautions are wholly or partially out of operation. Make sure that contingency measures are available and installed on site.

Dangerous electrical voltage!
When connecting the FST-3 control cabinet, there is a risk of touching live parts.
Disconnect the system and all components from the voltage supply before commencing with installation or wiring work. Make sure that the MAIN SWITCH and the fuses F4,F4.1, F21 and F50 are switched off!

An incorrect connection can lead to injuries and even to death. Components may be destroyed. Pay attention to the coded pins and labels of the plugs and terminals when connecting cables!

Loss of warranty for the entire FST-3 (S2) system!
Never leave cables hanging down suspended – only tightly, like in a cable duct.
Do not shorten excess cable lengths. Instead, route them into rings with a diameter of at least 1 m.
Avoid routing cables close to electric power lines.
Maintain a minimum distance of 50 mm from electric power lines.
In a worst-case scenario, make sure to cross them only at 90° angles.
Single conductors are to be used in the control cabinet or car top box; only sheathed cables are to be used outside.

Connecting and configuring control and safety components

The following terminal designations are standard terminal designations, i.e. these designations with the exception of the FST-3 and S2 themselves may differ from the actual state! The system-specific wiring diagram is therefore always binding and must additionally be used and referred to.

Anti creep device

If an anti creep device is present:

► Connect the feedback contact of the anti creep device (closed in idle state – NC) to terminals **X40:95 and 96 (S2-X48:4) on the terminal strip in the control cabinet**.

Access monitoring – emergency release monitoring

If emergency release monitoring contacts for the access monitoring of the shaft pit and/or for the car roof are present:

► Connect the contact that is responsible for access to the shaft pit, to terminals **X50:2 and 12 (S2-X47:2) on the terminal strip in the control cabinet**.

► Connect the contact(s) that enable access to the car roof, to terminals **X50:3 and 13 (S2-X47:1) on the terminal strip in the control cabinet**.

These contacts must be positively opening and meet the requirements of EN81-20 and 21. Only monostable (non-latching) normally closed (NC) contacts may be used for access monitoring.

If these measures are not required:

► Permanently bridge the corresponding terminals.

► If there are requirements for emergency release monitoring when ordering the control system, the bridging of the terminals is performed by NEW LIFT. In any event, this requirement must be checked by the lift engineer on site!

If access monitoring is required <u>neither</u> in SG nor SK, a bridge must be permanently connected to the terminals X50:4 and 14 (X48:5-S2). If this bridge is set, no RESET is required for SG or SK after a power failure,

and no S2 reset is required, i.e. no access monitoring (reset lock).

Safeguard for the protected space in the shaft pit

If folding supports or suchlike are present for creating a protected space in the shaft pit, these contacts:

- ► are to be connected for a normal drive to terminals **X50:5 and 15 (S2-X47:4) of the terminal strip in the control cabinet** (support horizontal – protected space inactive = contacts closed)
- ► are to be connected for an inspection drive SG to terminals **X50:6 and 16 (S2-X47:3) of the terminal strip in the control cabinet** (support vertical – protected space active = contact closed).

These contacts must be positively opening and meet the requirements of EN81-20 and 21.

If these measures are not required:

- ► Permanently bridge the corresponding terminals.
- ► The terminals are bridged by NEW LIFT if necessary, provided this is known when the controller is ordered. In any event, this requirement must be checked by the lift engineer on site!

Safeguard for the protected space on the car roof

If folding supports or suchlike are present for creating a protected space under the counterweight or on the car roof, these contacts:

- ► are to be connected for a normal drive to terminals **X50:7 and 17 (S2-X48:1) of the terminal strip in the control cabinet** (support horizontal – protected space inactive = contacts closed)
- ► are to be connected for an inspection drive SG to terminals **X50:8 and 18 (S2-X48:2) of the terminal strip in the control cabinet** (support vertical – protected space active = contact closed).

These contacts must be positively opening and meet the requirements of EN81-20 and 21.

If these measures are not required:

- ► Permanently bridge the corresponding terminals.
- ► The terminals are bridged by NEW LIFT if necessary, provided this is known when the controller is ordered. In any event, this requirement must be checked by the lift engineer on site!

If the bridges are not set or the monitoring contacts are not connected, normal / inspection / auxiliary mode control drives are not possible!

Auxiliary mode control

If an external auxiliary mode control pod is used:

- ► Connect the auxiliary mode control.

SG inspection control

- ► Connect the car top control pod for the shaft pit to the terminal strip **X14, X15** and **X16**.

FK inspection control

Provided the travelling cable is fully connected inside the control cabinet and in the car top box:

- ► Connect the car top control pod for the car to the terminal strip **X14, X15, X16 and X27** in the car top box.

Tape switch

- ► Connect tape switch **S53** to terminals **X50:1** and **11 (X48:3 -S2)**.

If a shaft table is already wholly or partially present in S2, the tape switch is not hidden in installation mode. Therefore, either a temporary bypass of the switch is required or the deletion of the shaft table. You can check whether there is an entry in the shaft table in the "S2 shaft table" guide menu.
The deletion of the table is only possible with installation mode activated.
Please note the following sequence:

► ***Switching on installation mode***
► ***Delete command->*** `Teach menu - Delete All S2-Pos.`
► ***Switching off installation mode***
► ***Switching on installation mode***

9.2 Preparing to switch on the controller

Check the following values prior to switching on the FST-3 controller:

› Main supply as clockwise three-phase rotation
› Function of the fuses and the residual current device (RCD)
› Function of the control cabinet components
› Proper connection of the earth wires
› Secure seating of all primary power supply lines

The display and operation of the FST-3 controller are described in chapter *see 7 User interface of FST-3 controller, page 33*.

9.2.1 Switching on the FST-3 (S2) controller

► *Switch on the MAIN SWITCH*, where applicable also additional RCBOs, circuit breakers or fuses that are on the main supply line, as well as any UPSs and their fuses.

For further information, see also the specific system wiring diagram.

► Switch on controller fuse **F4, F21** and **F50 (S2)**.
Wait until the control software has fully booted up.

During the boot process, the lowest line briefly displays a progress bar and then changes to the main screen:

```
    SAFETY CCT CLOSED

>A<
 00             13:06:56
```

9.2.2 Checking the safety circuit (Safety CCT)

► Switch on the circuit breaker for safety circuit F4.1

If line A does not show `SAFETY CCT CLOSED` or `S2-SHK RELAY OPEN`, the safety circuit wiring is incomplete or faulty or e.g. emergency braking switches have been actuated and must be checked or, where necessary, supplemented or connected.

Using the system-specific wiring diagram enclosed with each controller, connect the safety circuit such that this circuit is "closed" and the message " `S2-SHK RELAY OPEN` ***" appears in the display. If electromagnetic safety gear that is in the non-energised state is used, the display will differ due to the arrest switch.-->*** `"EMERGENCY STOP-CAR"`

Dangerous electrical voltage!
Touching electrically live parts either directly or indirectly can result in an electric shock.

Make sure that the safety circuit or, if necessary, the complete system is de-energised before continuing inspection of the safety circuit.

► De-energise the safety circuit using fuse F4.1 and/or main switch Q1.

Safety circuit terminals S2 assignment

Assignment of S2 terminals	Message
X32:4	EMERGENCY STOP-CAR
X14:2	EMERGENCY STOP
X14:3/X32:3	EMERGENCY END SWITCH - MANUAL DOOR OPEN - DOOR C OPEN (depending on the system configuration - see wiring diagram)
X14:4/X32:2	DOOR B OPEN
X14:5/X32:1	DOOR A OPEN
X14:6	DOOR LOCK A OPEN
X14:7	DORR LOCK B OPEN
X14:8	SAFETY CCT CLOSED

```
   S2-SHK-RELAY OPEN

>A<
 00              13:06:56
```

```
  EMERGENCY STOP-CAR

>A<
 00              13:06:56
```

- ► After successful inspection and adaptation of the safety circuit, switch on fuse F4.1 and/or main switch Q1.
- ► Measure the capacitive coupling on the safety circuit – see chapter 14.6

9.3 Installation mode, teach mode and S2 error reset

The procedure for switching the installation and teach mode ON/OFF and for performing an S2 error reset is explained here. This procedure is necessary multiple times during commissioning.

9.3.1 Switching installation mode on/off

- ► Switch on the auxiliary mode control or service control (1)
- ► [Enter] Main Menu/ [▽] to Config [Enter]/ Commissioning [Enter]/ [▽] to S2 System [Enter]/ [▽] to `Installation Mode ON` [Enter]/ Installation Mode [▽] ON [Enter]/ [◄] to Standard Display
- ► Switch off the auxiliary mode control within 15 seconds
- ► In the display of the FST, the message `INSTA.S2` appears in line D alternating with the time.

The switch-off procedure is analogous to the switch-on procedure.

9.3.2 Switching teach mode on/off

▶ Switch on the auxiliary mode control or service control (1)

▶ Enter Main Menu/ ▽ to Config Enter /Commissioning Enter / ▽ to S2 System Enter / to `Teach Mode ON` Enter / Teach Mode ▽ ON Enter

▶ Switch off the auxiliary mode control within 15 seconds --> `S2 ERR RESET OK`.

▶ In the display of the FST, the message `TEACH MODE S2` appears in line B.

The switch-off procedure is analogous to the switch-on procedure.

9.3.3 Procedure for S2 error reset

▶ Switch on the auxiliary mode control or service control (1)

▶ ▶ Test Menu/ ▽ to `Error Reset S2` Enter

▶ Switch off the auxiliary mode control within 15 seconds

A reset must always be a deliberate action, the subsequent consequences and potential risks of which must be taken into consideration.

9.4 Checking important system functions

9.4.1 Checking system settings of the FST (commissioning step 2)

▶ Check the following parameters on the display of the FST:

- `FST software version > at least V1..180`

▶ Press Shift+Enter simultaneously

- `Main menu/Positioning/Global/Encoder/CAN-S2`
- `... Resolution/ 008,0000`

▶ Press Func button and use ▽ until `S2 I/O status` appears and select with Select.

▶ Observe the CAN status in the overview.

- The communication is OK if the message `S2` appears in the *GUIDE*.
- If the message `CAN communication error` appears in the *GUIDE*, or `S2-COMMUNICAT. FAIL` in line B, the CAN line (FST-3 (X10) and S2 (X10)) or the voltage supply and fuse F50 of the S2 must be checked.

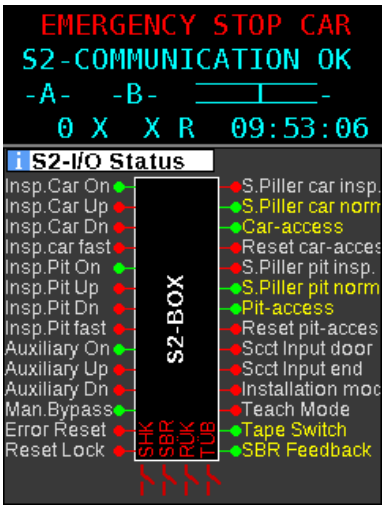

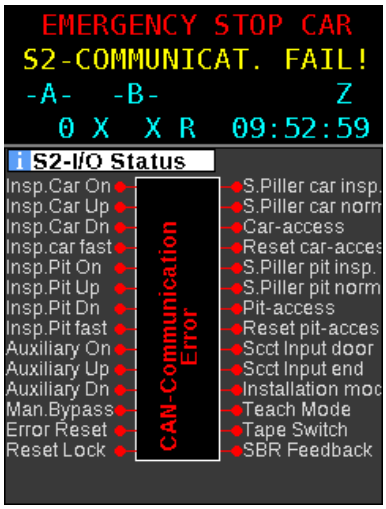

9.4.2 Checking installation mode (commissioning step 3)

Requirements

› Auxiliary mode control is switched off
› Both inspection controls are switched off
› Teach mode is switched off
› Installation mode is switched off

Procedure

▶ Check that the Status LED (S2) is flashing green slowly (indicates normal operation)
▶ Switch on installation mode
▶ The Status LED must now flash rapidly red and green alternately
▶ Open *S2 monitor* on the FST:
»For `installation mode`, there must be an open, red contact shown in the `SHK` (Figure 1) column
»Switch off installation mode. The status must change to a green closed contact (Figure 2) and the Status LED must again start to flash green slowly.

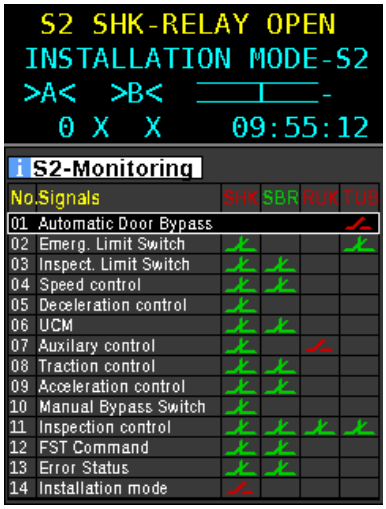

Figure 1

Figure 2

9.4.3 Checking system speed (commissioning step 4)

If available:

▶ Check the set speeds of the frequency inverter or similar with the system data.**Setting and checking the safety parameters of the S2 system (commissioning step 3)**

The FST controller (entire system) is preset at the factory with an S2 configuration code. This code was generated in the factory based on the serial number of the respective S2 and the nominal speed reported to NEW LIFT when the control system was ordered. If the transfer from the FST to the S2 is faulty, the message `S2 trigger speed missing!` appears.

`S2 trip velocity missing!`

`Attention! S2 configuration for trigger speed missing! ->Configuration/ Installation/S2 System/Cfg. Trigger Speed/ XXXXXXXX Confirm the code with` Enter!

A drive is possible, but the speed monitoring of 0.375 m/s pre-configured by default applies.

To enable or transmit the system-specific code, the following steps are required:

- ► The S2 must not be in the fault condition "S2-Err." or similar, otherwise the value will not be adopted. In this case, perform the RESET procedure described in 9.3.3.
- ► Installation mode ON
- ► In the menu `FST Configuration/Installation/S2-System/Config Trip-Speed/XXXXXXXX`, confirm the code with Enter!
- ► Switch off installation mode so that the changes are saved in the EEPROM
- ► Check the speed in the guide

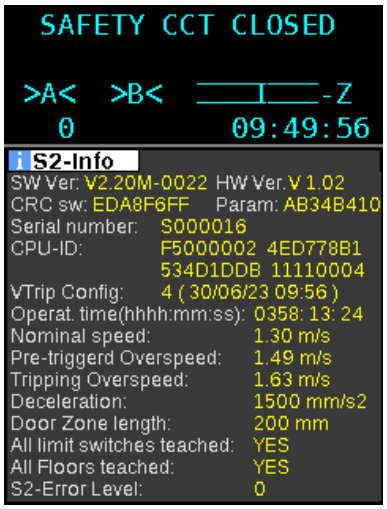

Example: nominal speed 1.30 m/s

If there is no value entered in the `Config Trip-Speed` menu item (i.e. 00000000) or the nominal speed value visible in the guide S2 info does not match the system speed, you must contact NEW LIFT via the service line. From there you will receive a corresponding code.

Parameteränderung S2	NEWLIFT NEUE ELEKTRONISCHE WEGE

Werknummer:	XC222040
Kunde:	Mustermann Aufzüge
Bearbeiter-Kunde:	AL
Kunde E-Mail-Adresse:	mustermann@muster.de
zusätzliche Information:	Änderung der Nenngeschwindigkeit von 1,0m/s auf 1,2m/s.
Datum / Uhrzeit:	14.03.2023 / 11:33
Bearbeiter-NewLift:	al (Anmeldename am PC: al)
Arbeitsstation-NewLift:	PC-10-LINKE
Zielgerät:	S2
Nenngeschwindigkeit:	1,2 m/s
Auslösegeschwindigkeit:	1,5 m/s
Seriennummer:	0000815
Eingangs-Parameter:	-gS2 -d1500 -hsS2Vt -h0000815
Configuration-Code:	65 B2 95 F4

Enabling code example

Requirements for modifying the S2 configuration

› NEW *LIFT* service can be contacted
Contact - (see 1.5 How to contact us, page 10)

› Installation mode *is ON*

► Call the NEW *LIFT* service and have your serial number, nominal speed and factory number as well as the S2 information (S2 info) displayed in the *FST* ready.

The NEW *LIFT* service team will ask you for more information.
You will receive an enabling code via SMS, email or verbally.

► Enter the enabling code received from the NEW *LIFT* service team into the FST menu.
Enabling code: `_____`

► FST menu `Configuration/Installation/S2-System/Config Trip-Speed/XXXXXXXX`

► FST menu `Configuration/Installation/S2-System/Config Deceleration/XXXXXXXX`

► Check newly set safety parameters via *S2 info*.

► Switch off installation mode.

9.4.4 Performing a reset and activating the safety system

An S2 reset is always required for the system activation for a commissioning/installation drive.
S2 errors are power-failure-proof, meaning that turning the voltage supply on and off does not cause a reset.

S2 error reset

► Switch on the auxiliary mode control or service control (1)

► Select Test Menu/`Error Reset S2`

► Switch off the auxiliary mode control within 15 seconds --> `S2 ERR RESET OK.`

If the auxiliary mode control is not actuated within 15 seconds, the reset procedure is not performed --> S2 `ERR RESET missing!` ***A reset must always be a deliberate action, the subsequent consequences and potential risks of which must be taken into consideration.***

Once the *S2 RESET* has been performed, the access monitoring (if terminals X48:5 with S2 24VDC are not wired) is active. This means that a reset with the **S256, S205**,**S206 or S207** key switch is required for normal or auxiliary mode control drives.

After each S2 reset or power failure, the access monitoring must always be reset for an auxiliary mode drive or normal drive in cases where the RESET LOCK is not active (access monitoring does not need to be reset after a power failure or S2 reset).

For drives with the inspection control systems with reduced protected spaces in the shaft head or shaft pit, the respective protective measure (supports, etc.) must be active. A RESET of **S256, S205**,**S206 or S207** is not necessary in this case.

If key switches for shaft pit and/or shaft head are present:

► Make sure that:
- nobody is in the danger zone
- the safety circuit is closed
- the inspection control is OFF
- the safety supports for the inspection are in the deactivated position (normal drive).

► Press the reset button **S256, S205**,**S206 or S207** and hold it down until the message `HOLD SG / SK RESET` disappears from the display.

► An auxiliary mode control drive is now possible.

9.4.5 Installation drive without sensor

Danger of falling! Risk of serious injury or death!
In installation mode, position-dependent safety functions – especially the safety function for monitoring speed and acceleration – are out of operation until

› ***either one of the four end switches has been taught or***

› ***valid position data is available or***

› ***the tape switch has been connected.***

Be aware of the active/inactive safety functions at all times during commissioning.
After completing installation work, deactivate installation mode

▶ Switch on installation mode:
In line C of the display of the FST controller appears the message
`INSTALLATION MODE-S2.`
If *Inspection* or *Auxiliary mode* are also activated, the message `INSTA.S2` appears in line D alternating with the time.
An inspection or auxiliary mode control drive without encoder is now possible.

9.4.6 Checking auxiliary mode control (commissioning step 5)

A drive with auxiliary mode control may only be possible with folded up supports.
Make sure that the system is properly wired!

▶ Switch on auxiliary mode control.

▶ Fold up existing folding supports for SG and/or SK (position for normal operation)

▶ Check the display of the FST:
The information `AUXILIARY MODE` must be displayed.
In the guide S2 I/O status, the inputs ***Support FK norm*** *(SK)* and ***Support SG norm*** appear in yellow text.

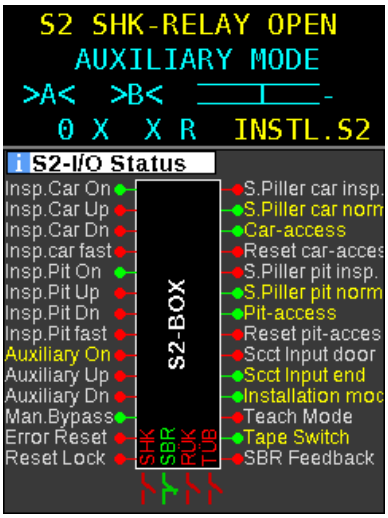

▶ Press switch in the desired direction of travel and observe drive/car:
If the direction of travel is incorrect:

- Change the direction of rotation in the menu of the frequency inverter or suchlike and repeat the test.

▶ Press switch in the desired direction of travel and observe drive/car:
If the speed is incorrect:

- Change the speed in the menu of the frequency inverter or suchlike and repeat the test.

▶ Observe the FST display:
If the direction of travel is not actuated, the message
`S2 SHK-RELAY OPEN` must be shown in line A of the FST display.

If the message does not appear, the SHK contact of the S2 is bypassed and therefore not functional.

- This error must be rectified.

9.4.7 Checking SHK relay triggering (commissioning step 6)

A check is performed as to whether the SHK relay opens the safety circuit. This step can be performed together with the previous step.

▶ Switch on auxiliary mode control.
▶ Use an AC voltmeter to check that 230 VAC is applied at the terminal **X14:8** before the SHK relay.
▶ Use an AC voltmeter to check that no 230 VAC voltage is applied at the terminal **X20:2** after the SHK relay.
▶ Move the car towards the centre of the shaft with auxiliary mode and check if voltage is applied at the terminal **X20:2** during the drive.
▶ Make sure that the drive brake or similar is switched by the SHK relay:
▶ To do this, open `S2 I/O status` in the guide menu and monitor the `SHK contact`.
▶ Switch off the safety circuit fuse **F4.1**.
▶ Disconnect N-conductor output (towards contactors) from the terminal **X20:1** of the S2 system.
▶ Switch on the safety circuit fuse **F4.1**.
▶ Start drive test.
The lift must not start.
On the display of the *FST* the message `CLOSED` must appear in line A.
▶ Switch off the safety circuit fuse **F4.1**.
▶ Reattach the N-conductor of the S2 system.
▶ Switch on the safety circuit fuse **F4.1**.
▶ Switch off auxiliary mode control.

9.4.8 Checking the traction (commissioning step 7)

If you have not done so already:

▶ Check that the braking action of the system (brake, traction sheave, etc.) decelerates the car adequately.

For example, you must perform an emergency stop during an auxiliary mode control drive to check if there is a dangerous slipping of the car over the traction sheave or, in the case of hydraulic systems, if a hazard can arise due to a valve release delay. A possible hazard is to be assessed by the lift engineers themselves.

9.4.9 Checking SBR relay triggering (commissioning step 8)

If an anti-creep device or a safety brake is present, then a visual inspection will suffice, because the triggering is monitored via the feedback contact. In the event of faulty feedback, the message `S2-ERR. SBR-SBRFB` appears in line B.

▶ Visually inspect correct wiring of SBR relay and feedback contact.
See wiring diagram.

9.4.10 Checking the folding supports protected space version (commissioning step 9)

If folding supports and/or folding railings are required, their function must be checked.

Perform the check for both shaft ends separately!

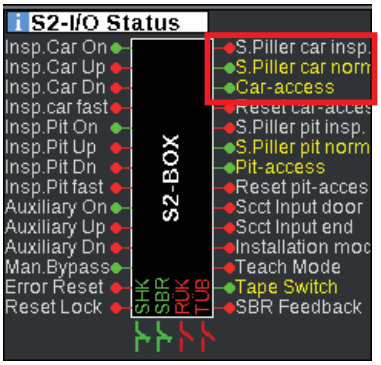

- ▶ Fold up car folding supports (position for normal operation of the car).
- ▶ Check status of the folding support and access monitoring via FST display, guide `S2 I/O status`:
  The input `S.Piller car Insp.` must appear in white text; the input `S.Piller car norm` must appear in yellow text.

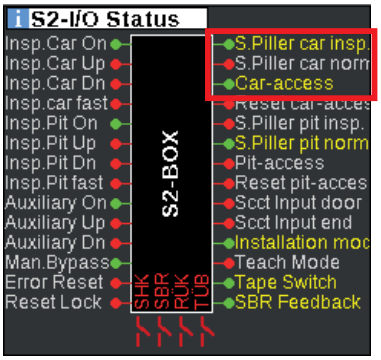

- ▶ Fold out FK folding supports (position for inspection operation of the car).
- ▶ Check status of the folding support and access monitoring via FST display, guide `S2 I/O status`:
  The input `S.Piller car Insp.` must appear in yellow text; the input `S.Piller car norm` must appear in white text.

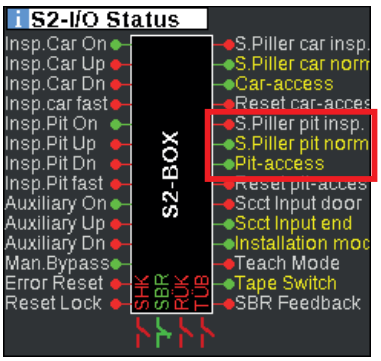

- ▶ Fold up SG folding supports (position for normal operation)
- ▶ Check status of the folding support and access monitoring via FST display, guide `S2 I/O status`:
  The input `S.Piller pit insp.` must appear in white text; the input `S.Piller pit norm` must appear in yellow text.

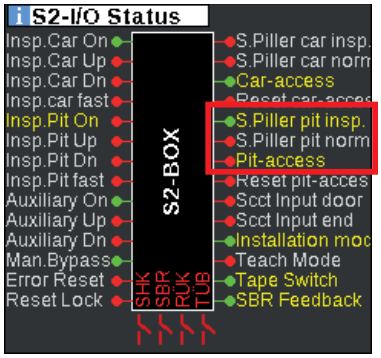

- ▶ Fold out SG folding supports (position for inspection operation of shaft pit)
- ▶ Check status of the folding support and access monitoring via FST display, check guide `S2 I/O status`:
  The input `S.Piller pit insp.` must appear in yellow text; the input `S.Piller pit norm` must appear in white text.

Once check is complete:

- ▶ Bring folding supports into position for normal operation.
- ▶ Check status of folding support and access monitoring via FST display.
- ▶ Reset the access monitoring through the switch designated for this purpose.
- ▶ Check status of folding support and access monitoring via FST display.

▶ If necessary, also perform a check as per EN81-21, 6.2 (checking the lift before commissioning).

9.4.11 Checking the inspection control (commissioning step 10)

If commissioning is performed using the inspection control, it has to be checked at this point. Otherwise, the checking of the inspection control can occur at a later point in time.

Perform the check of both car top control pods separately!

Requirement

The emergency braking switch of the inspection pod(s) is wired in the safety circuit and checked.

- ▶ When actuating the emergency braking switch, `EMERGENCY STOP /EMERGENCY STOP CAR` appears in line A.
- ▶ Check set inspection speeds in FST and inverter:
  - `Main menu/System/Factory menu/Hidden Menus Yes /Settings/V-inspect. max 630mm/s`
  - Check inspection speed as per inverter description.

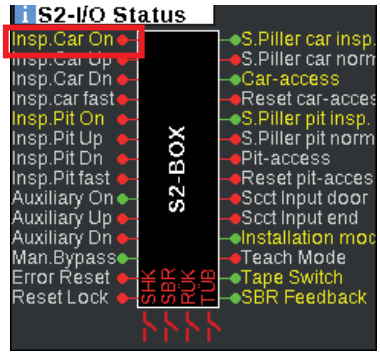

- ▶ Check COMMON button for correct wiring:
  - Switch **FK** inspection control **off**.
  - Press COMMON button of the inspection control system.
    In the FST guide `S2 I/O status`, the lettering for the input `Insp.Car On` must change from white to yellow.

This test is not required for original NEW LIFT car top control pods, because this test has already been performed by NEW LIFT!

► Check direction button:

- Press the **UP** button without simultaneously pressing the **COMMON** button.
  The car must not move.
- Press the **DOWN** button without simultaneously pressing the **COMMON** button.
  The car must not move.
- Simultaneously press the **UP** and **COMMON** buttons.
  The car must move upwards.
- Simultaneously press the **DOWN** and **COMMON** buttons.
  The car must move downwards.

► Check direction and speed fast/slow (FK car top control pod):

- Simultaneously press the **UP**, **COMMON** and **FAST** buttons.
  The car must move upwards fast.
- Simultaneously press the **DOWN**, **COMMON** and **FAST** buttons.
  The car must move downwards fast.
- Switch **FK** inspection control off.
- If necessary, reset the inspection control and shaft access:
  Switch F4.1 on and off again and, if necessary, perform `RESET Insp.SG` in the FST test menu.

If already installed:

► Check the SG inspection control at the same as the FK inspection test.

- Check mutual interlocking of both car top control pods:
- Switch on both inspection switches.
  A drive must only be possible if the same direction of travel is selected for both pods and also the **COMMON** buttons are pressed.

9.4.12 Installing the position system (commissioning step 11)

See Chap. 1.4 Further information, page 10.

9.4.13 Installing the magnetic tape

Risk of crushing! Risk of serious injury or death!
Prior to entering the shaft pit, make sure that contingency measures are available and installed on site.

There is no standard procedure for installing the magnetic tape. This will depend on the circumstances on site.

Possible ways to install the tape

› In a scaffolded state:
This is the safest way. The car must not be moved.

› Using the inspection control on the car roof:
The drive on the car roof takes place under reduced safety conditions (e.g. no speed limiting function). Additional safety measures for the lift engineer may be necessary.

› Using the inspection control in the car if the car is not yet installed:
The drive in the car takes place under reduced safety conditions (e.g. no speed limiting function). Additional safety measures for the lift engineer may be necessary.

9.4.14 Installing the magnetic tape with magnetic tape holder

This bracket is a modified form of the LIMAX-S-RMS bracket, but the function is identical.
See Chap. 17.2.2 Sensor bracket, page 212

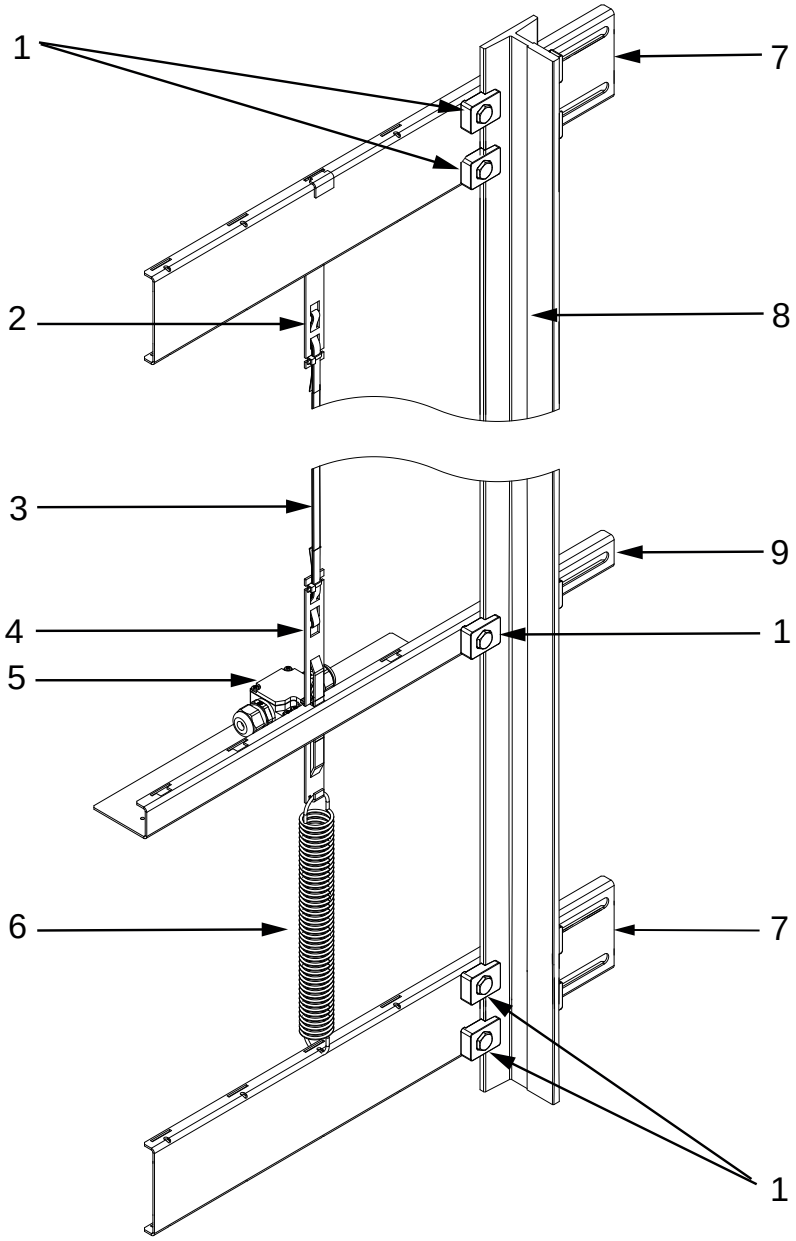

1 Crossbar rail clamps
2 Tape clamp
3 Magnetic tape
4 Tape clamp for tape switch
5 Tape switch
6 Tension spring
7 Crossbar
8 Guide rail
9 Crossbar for tape switch

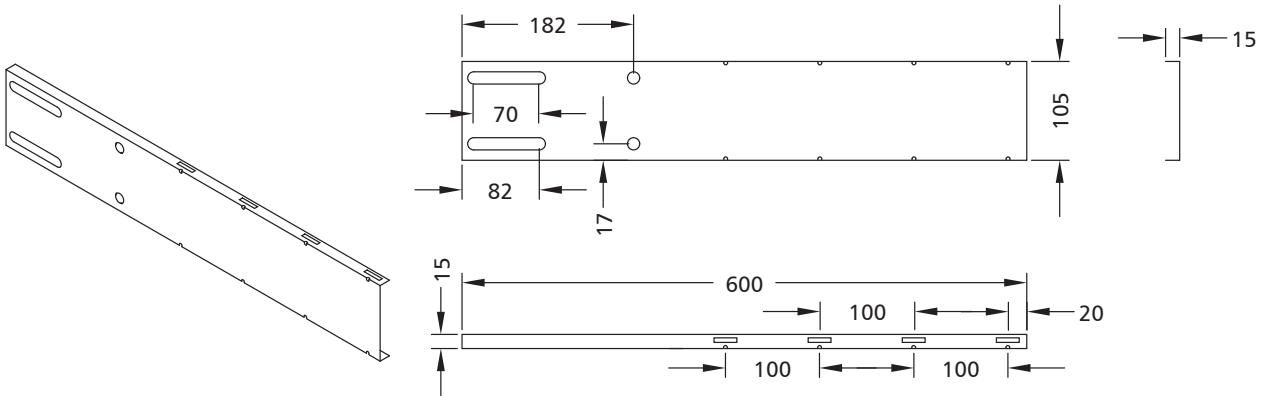

Crossbar

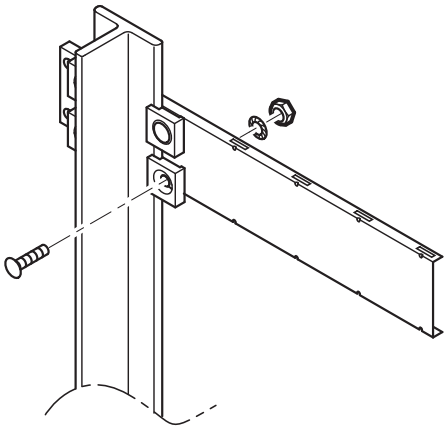

► Install first crossbar in the shaft head:
Tighten fixing screws with a torque of **85 Nm**.

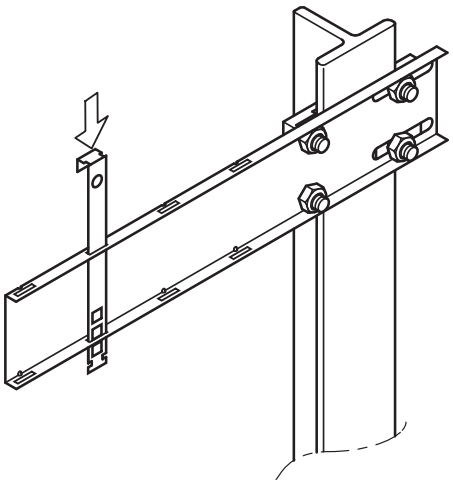

► Insert tape clamp into a slot in the crossbar.

Make sure the magnetic tape is aligned correctly!
The imprinted arrows must point towards the shaft head (UP).
The printed side (magnetic side) of the tape must be on the side pointing towards the read head; i.e. the steel side usually faces the shaft wall.

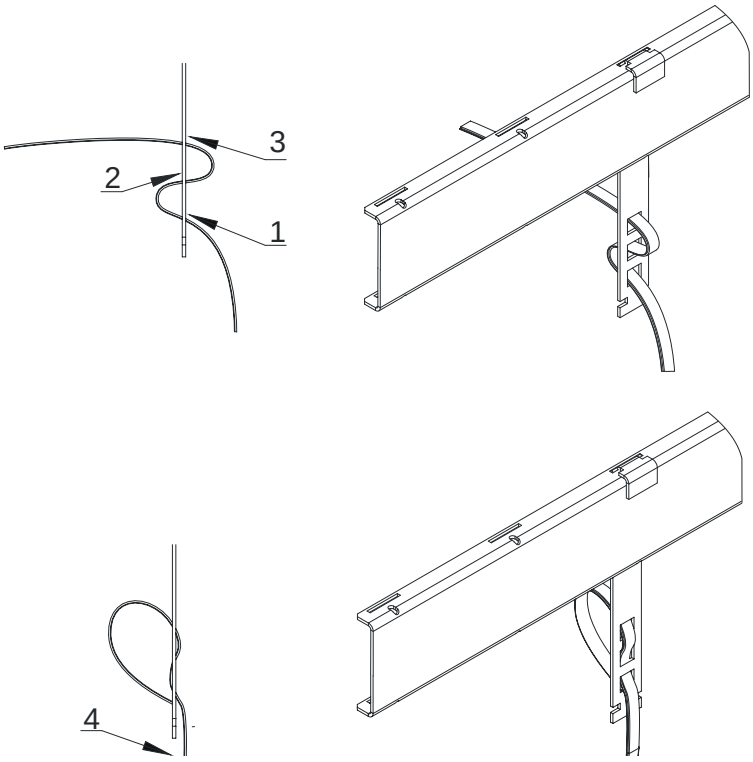

- ▶ Thread the tape from bottom to top into the top tape clamp in steps (1–3) so that at least 20 cm of tape protrudes.
- ▶ Press the tape firmly into the tape clamp so that a bend forms in the top loop (4).
- ▶ Secure the tape on the bottom end of the tape clamp with a cable tie.
- ▶ Move downwards with an inspection drive and simultaneously unroll the magnetic tape.
  The tape can be unreeled straight out of the packaging without opening the packaging.

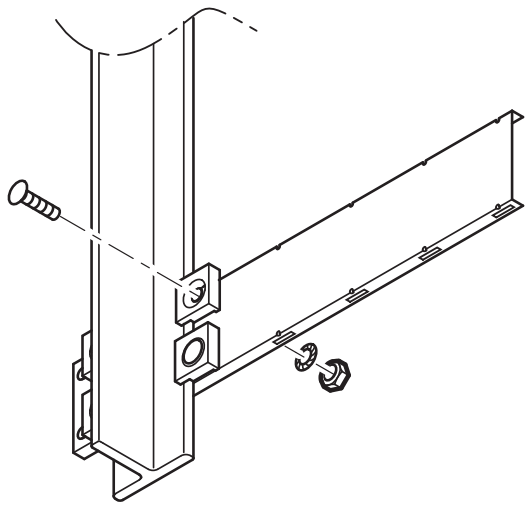

- ▶ Install the second crossbar in the shaft pit.

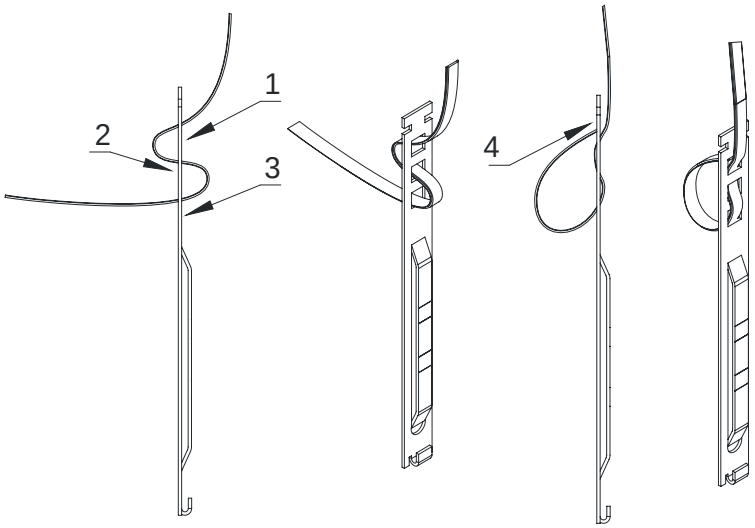

- ▶ Thread the tape from top to bottom into the bottom tape clamp in steps (1–3) (tape clamp for the tape switch) so that at least 20 cm of tape protrudes.
- ▶ Only thread in loosely so that the clamp can still be shifted!

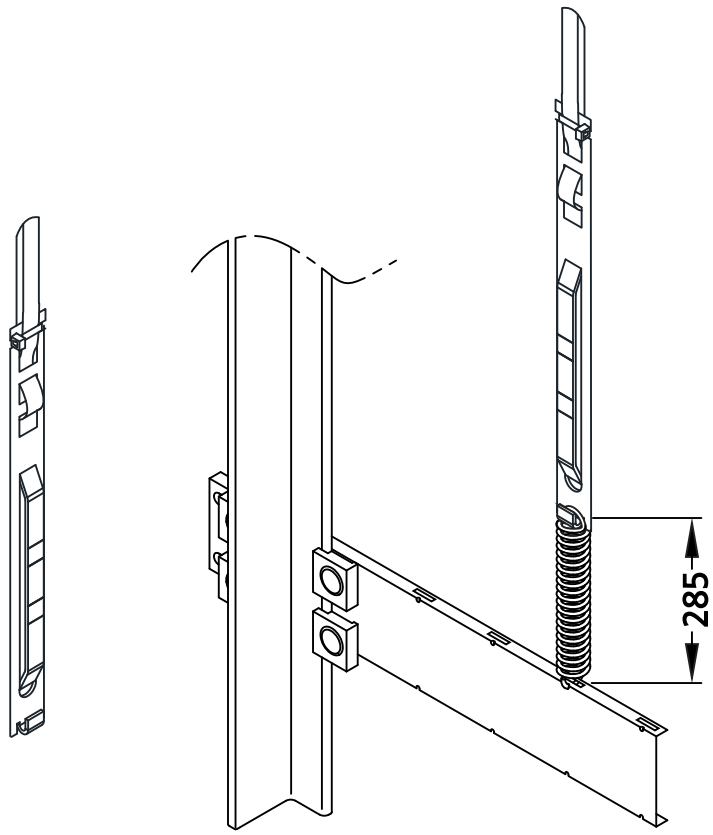

- ▶ Attach tension spring to the provided hole of the crossbar.
- ▶ Make sure that you are using the same position as with the top crossbar!
- ▶ Hook the tape clamp to the spring.
- ▶ Tension the spring to a length of **285 mm**.
- ▶ Press the tape firmly into the tape clamp so that a bend forms in the bottom loop.
- ▶ Secure the tape on the top end of the tape clamp with a cable tie.

⚠ ***Note the installation position of the switch!***

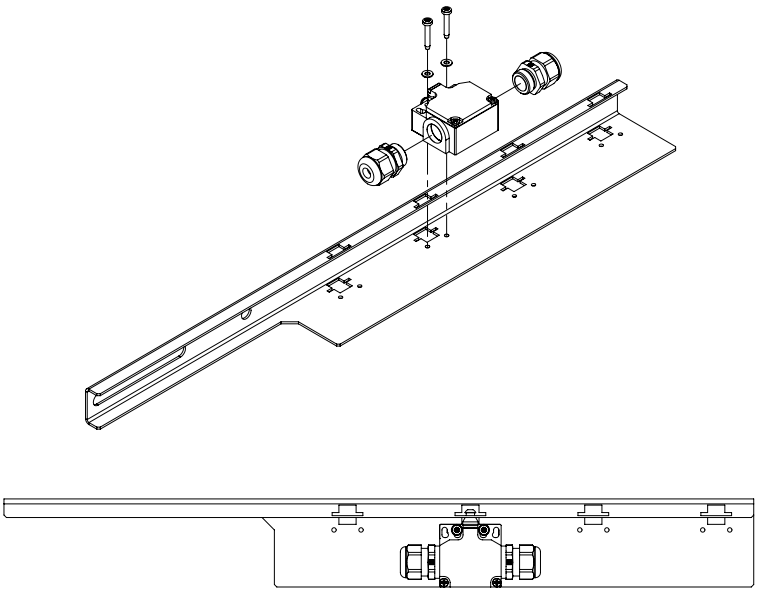

Example – Only one cable gland is required.

- ▶ Pre-install crossbar for the tape switch:
  - Attach cable gland to the tape switch either to the left or right.
  - Align tape switch flush with plate edge.
  - Tighten fixing screws with a torque of **3 Nm**.
- ▶ Connect tape switch at the NC contact of the tape switch to the terminal **X39:50** and **X39:51** in the control cabinet.
- ▶ ***Make sure that the switch is installed on the inside of the mounting bracket. Switch installation on the outside is not permitted, because otherwise the switch will not work.***

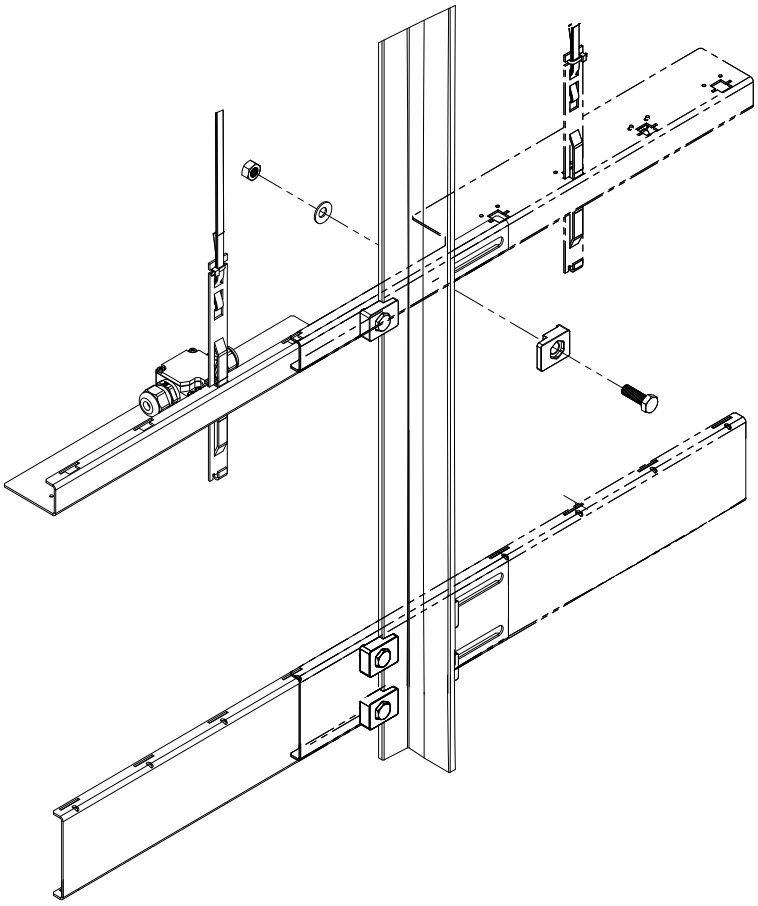

- ▶ Install pre-installed crossbar for the tape switch either to the right or left of the guide rail.
- ▶ Make sure to tighten the fixing screws so that the crossbar is still able to move!

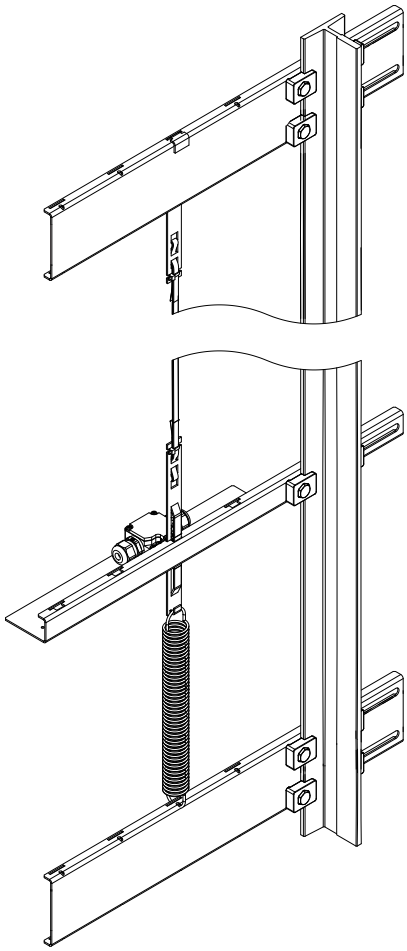

- ▶ Attach spring to bottom crossbar.
- ▶ ***Make sure that the spring fits correctly in the hole.***
- ▶ Guide the tape clamp from top to bottom through the recess of the crossbar.
- ▶ Attach tape clamp to the spring.

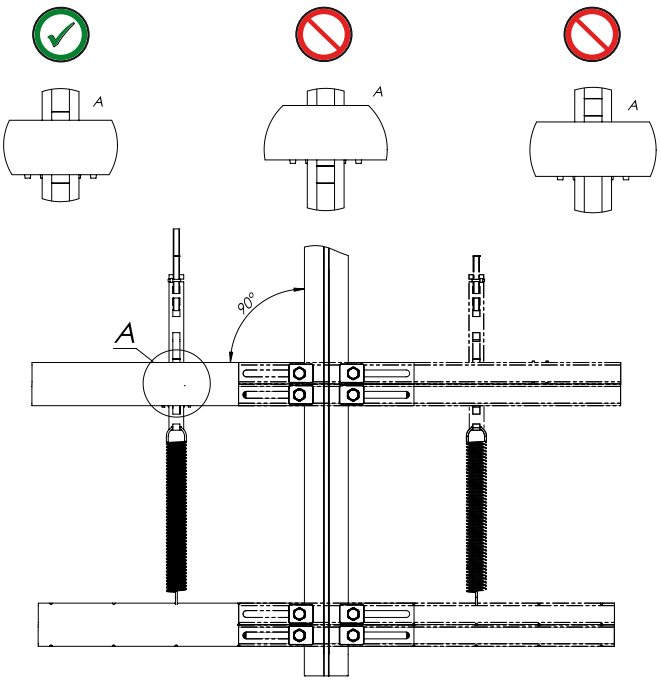

- ▶ Position crossbar for the tape switch at a 90° angle to the guide rail so that only one marking is visible above the tape clamp and only one is visible below it.
- ▶ Tighten the fixing screws to the crossbar for the tape switch with a torque of at least 20 Nm.
- ▶ ***Make sure the crossbar does not slip!***

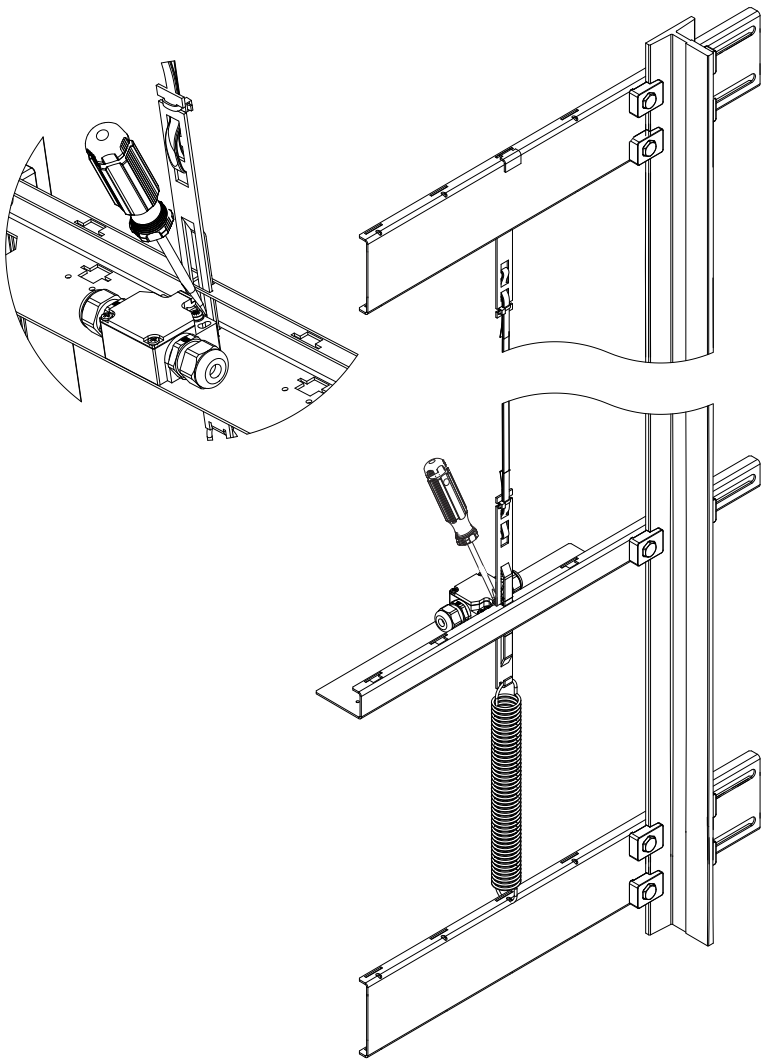

- ▶ Activate the tape switch: Pull the actuator out of the rubber sleeve with a screwdriver.
- ▶ Make sure not to damage the rubber sleeve!

9.5 Installing the sensor

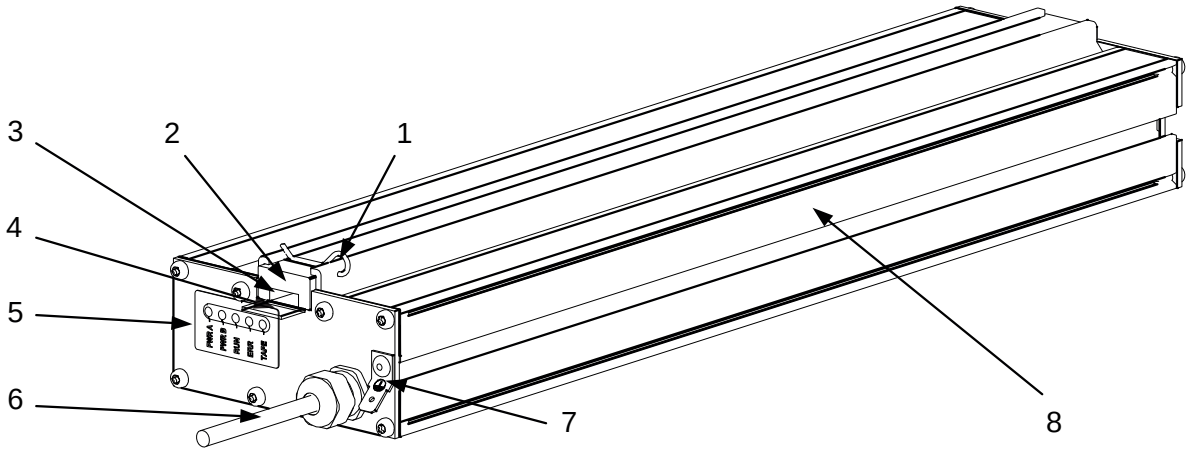

1 Cotter pin
2 Guide bar
3 Magnetic tape duct
4 Underlay
5 LED display
6 Cable connection
7 Earth connection
8 Sensor housing

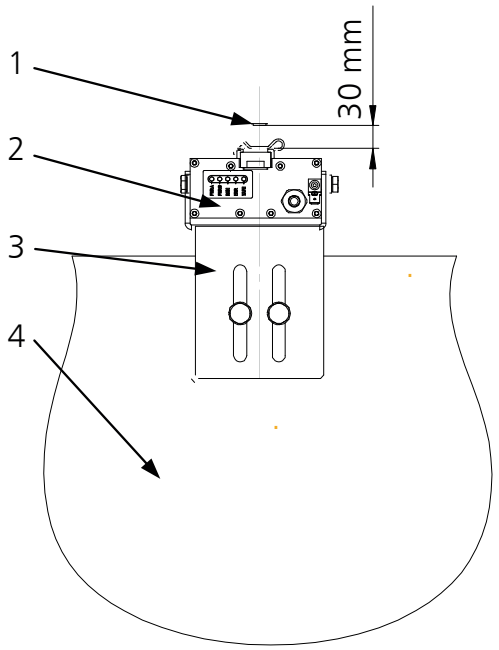

- ▶ Align sensor bracket on the car roof centrally to the magnetic tape.
- ▶ Loosely fasten the sensor bracket fixing screws, *see 17.2.2 Sensor bracket, page 212*.
- ▶ Attach the sensor to the sensor bracket so that the cable harness is pointing upwards.
- ▶ Set distance between magnetic tape and sensor to at least **30 mm**.
- ▶ Tighten sensor bracket fixing screws.
- ▶ Make sure that the sensor head is aligned vertically.

1 Magnetic tape
2 Sensor
3 Sensor bracket
4 Car

For lifting heights of up to 50 metres, NEWLIFT recommends a distance between tape and sensor of at least 30 mm. This offset ensures the tape is guided correctly on the steel side during operation. The distance can be increased if the tape with the magnetic side rubs on the sensor.

In the case of lifts with lifting heights of over 50 metres, this distance can be increased to 50 mm during the initial installation.

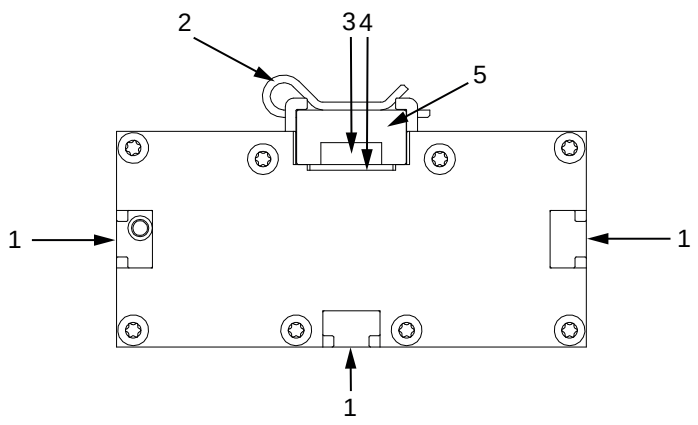

- ▶ Remove cotter pin from the guide bar of the sensor.
- ▶ Remove guide bar.

In this process, make sure that the underlay does not slip out of the guide slot and fall down into the shaft.

- ▶ Carefully insert the magnetic tape into the guide bar so it is flat and not twisted.
- ▶ Place guide bar with magnetic tape on the sensor and fix with cotter pin.

1 Installation slots (options)
2 Cotter pin
3 Magnetic tape
4 Underlay
5 Guide bar

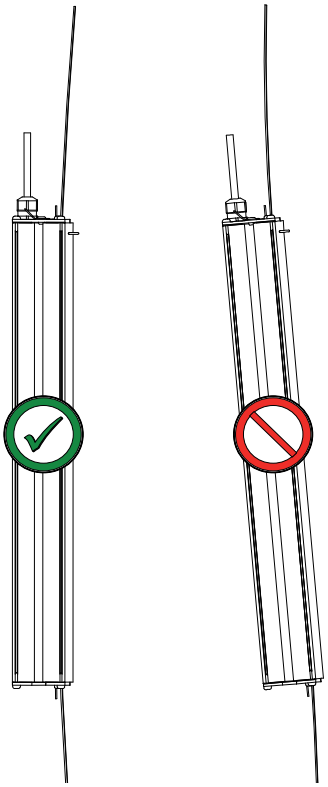

► Check magnetic tape position for correct installation.

9.5.1 Connecting the sensor and switching on the control system

If you insert a live plug, the sensors can become damaged!
Turn off the fuse F4 as well as F50 before inserting the sensor plug.

► Connect D-sub connector to the FSM-2 X25.
► Switch on the control system with **F4**.
► Switch on the S2 with fuse **F50**.
► Perform an S2 reset
see 9.4.4 Performing a reset and activating the safety system, page 75.

9.5.2 Sensor LEDs

Five LEDs on the top of the sensor indicate the operating states and faults:

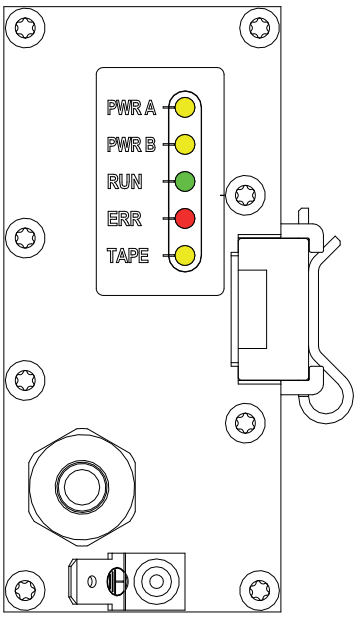

PWR A:	Supply voltage channel A
PWR B	Supply voltage channel B
RUN	Operating state
ERR	Fault indicator
TAPE	Magnetic tape state

States and events

LED	Colour	State	Meaning	Normal operation
PWR A	Yellow	ON	Channel A power supply present	YES
		OFF	No power supply present	
PWR B	Yellow	ON	Channel B power supply present	YES
		OFF	No power supply for channel B present. Due to the low voltage supply, the sensor is in energy-saving mode, or the power supply is out completely.	
RUN	Green	Flashing 5 Hz	Safe position data is sent via the interface.	YES
		Flashing $1^2/_3$ Hz	The sensor is in single-channel operation. Unsafe position data is sent via the interface.	
		Static	The sensor has been intentionally blocked. See also ERR LED.	
ERR	Red	OFF	No error present	
		Flashing 1 Hz	At least one error classified as not serious has been detected.	
		Irregular flashing	The device has blocked itself due to a serious problem and should be replaced.	
TAPE	Yellow	ON	Magnetic tape not present or damaged	
		OFF	Magnetic tape present	

9.5.3 Checking the position system (commissioning step 12)

Check if the FST receives valid position values from the S2 safety system:

- In the FST, use the **S** and **RIGHT** arrow buttons to set the display to `P=XXXXX`.
- With the auxiliary mode control, move the car and monitor the value `P=XXXXX` of the FST. When moving upwards, this value must increase, and decrease when going downwards.

  If the numbering is wrong:
  Change encoder direction: `Main menu/Positioning/Global/Direction/Left or right`

▶ Trigger tape switch (latching):

- Pull the magnetic tape upwards until the tape switch triggers.
- In the guide menu, check that the `Tape switch` input (white) is presented as shown below, as well as all relay outputs `SHK SBR, AUX` and `TÜR` (red):

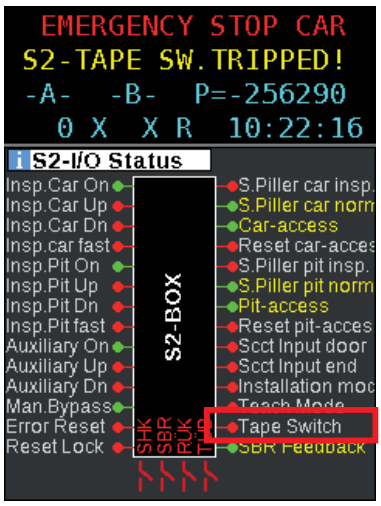

▶ Reset tape switch.

9.5.4 Installation check

▶ Perform an inspection drive across the entire lifting height and pay attention to the distances of the tape to the guide while doing so.

▶ Check the underside of the sensor several times.
The sensor must be aligned vertically.

When installed perfectly, the tape must always be pressed slightly with the steel side against the guide bar of the sensor across the entire lifting height.

If the tape rubs on the sensor:

- Increase the offset of the sensor to the tape to a maximum of 50 mm.
  If the tape continues to rub on the magnetic sensor:
  Check the tape is suspended straight in the shaft:
  - Detach tape from the guide bar.
  - Perform an inspection drive across the entire lifting height and pay attention to the distances of the tape to the guide while doing so.
  - Reattach the tape.
- If necessary, increase the tensile stress of the tape.
  Tapes that are too slack require too much offset between sensor and tape.

▶ Clean magnetic tape with a dry, clean cloth:

- Starting in the shaft head, drive right downwards with an inspection drive and, while doing so, pull the tape through the cloth applying light pressure.
- Remove any metal shavings that may have stuck to the magnetic tape through magnetism following metalwork.

9.5.5 Checking a loss of traction (commissioning step 13)

If a safety brake is present in the system:

► Check the safety function *loss of traction* is working:

- Switch on auxiliary mode control
- Release brake or actuate emergency drain valve so that the car moves.
- Check that the FST displays the loss of traction from the S2 safety system.
  The message `S2-ERR.TRACTION/UCM` must appear in the display.
- Check if the safety brake or *anti creep device* has triggered.
- Perform S2 RESET

9.5.6 Teaching end switches and end floors (commissioning steps 14 and 15)

Teaching the end floors and checking the inspection end switches can take place in a single work step. If a pre-triggered stopping system is present, the inspection end switches must be taught so that the protected space is guaranteed. In the case of folding supports, the inspection end switch must be taught so that shutdown occurs before reaching the buffer support(s).

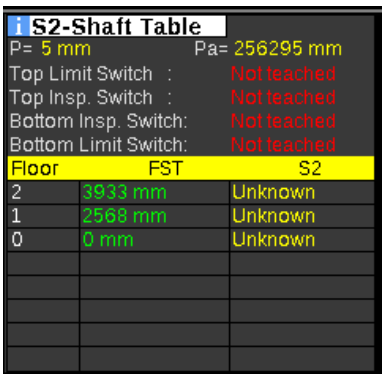

Example: End switch not taught

The S2 does not have any preset positions. The individual positions must be approached, and the reading (teaching) of the respective position must occur using a teach command.

Positioning

The positioning of the car and the approaching of the positions can be performed

› by means of the inspection control

or, if no protected space is present on the car roof:

› by means of auxiliary mode control.

To teach the positions, the *INSTALLATION MODE* must be **ON**.

Teaching both end floors early on in installation mode is recommended, because the *deceleration monitoring* safety function depends on them. Both normal operation and teach operation can only be used to a limited degree without taught end floors. Neither car nor landing calls are possible. The car can only be moved using auxiliary mode control or inspection control.

Command input

The teach command can be input using various input devices:

› FST-3 menu/keypad
Entry using the keypad of the FST-3 menu is always possible.

› LBG (LON Bluetooth gateway) – optional
The LBG enables the navigation of the FST-3 menu via smartphone from the car or from any point on the LON bus.

Switch positions in the system

The following switch positions exist in the system:

› Bottom/top inspection end switches

› Bottom/top end stop floors

› Bottom/top emergency end switches

As a rule, all six end switches can be taught in **any** sequence.
However, NEW *LIFT* recommends teaching using auxiliary mode control in the sequence below:

If an S2 RESET is performed due to an S2 error (e.g., traction error or similar) and installation or teach mode is switched on, the taught data are not saved. Final storage is not performed until the respective modes are switched off.

During the teach procedure, it is therefore recommended that installation mode be switched off and back on several times, including during TEACH mode.

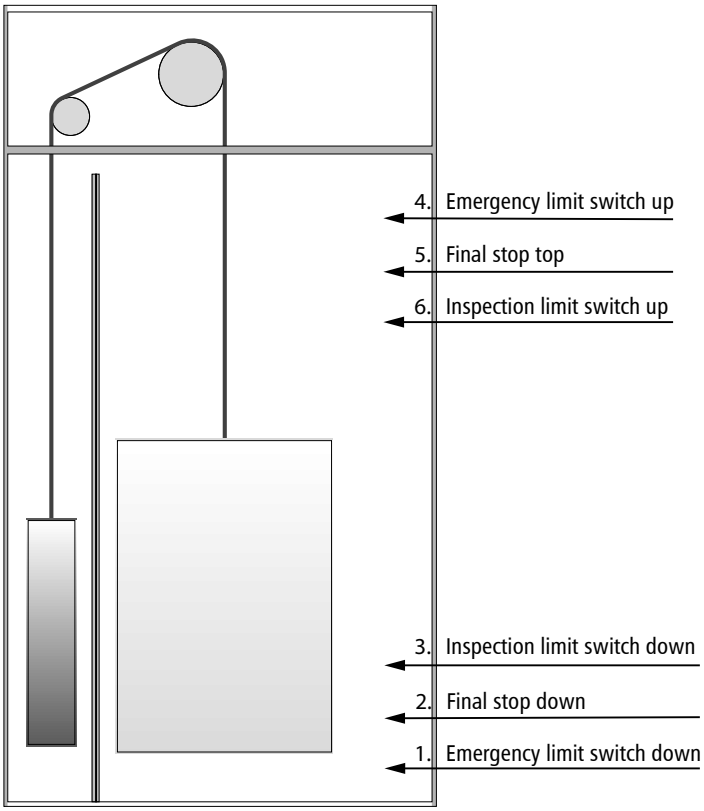

To teach these 6 positions, *INSTALLATION MODE must be switched on*. TEACH MODE must be OFF.
This MODE is required later for the remaining floors.

In INSTALLATION MODE, the positions "Bottom/top emergency end switches", "Bottom/top end floor" and "Bottom/top inspection end switches" are taught.

The intermediate floors are taught in TEACH MODE and the end floors are taught in INSTALLATION MODE.

A correction or fine adjustment of positions that have already been taught can occur subsequently. Positions that have already been taught are overwritten by a new teach command.

► Navigate to the teach function:
`Main menu/Configuration/Installation/S2-System/Teach menu`

► *Teach* Bottom end switch

- Drive car to the car buffer.
  The position *P Rel* shown on the display must no longer change.
- Drive the car upwards until the buffer is "free" again.
- Select `Teach Bt: E/S Pos.` and confirm with Enter.

After confirming with Enter, general instructions and information follow, which are to be confirmed with Enter.

***Do you want to delete the taught ES position?* YES? < Enter > *NO? <LEFT BUTTON>; Approach bottom end switch with insp/aux. – autostop* finished? < Enter >; *Check bottom end switch position* – finished? < Enter >; *Bottom end switch has been taught.* Continue? < Enter >**

▶ *Teach* bottom floor

- Move car upwards into the *Bottom end floor* position.
- Select `Teach Bottom floor` and confirm with Enter.

▶ Teach *bottom inspection end switch*

If protected space supports or suchlike are present, then the "bottom inspection end switch" must be taught so that the car does not touch the support and an evacuation route out of the pit with at least 0.5 m between the threshold and apron is ensured.

- Select `Teach Btm: Insp. E/S` and confirm with Enter.

In every case, the inspection end switch function must be taught – even if this is not necessary due to "natural" protected space. The standard position for the inspection end switch must be at approx. 50 mm before "level". This position must not be the same as the level position of the bottom floor of S2!

▶ *Teach* Top end switch

- Drive counterweight to the counterweight buffer.
  The position *P Rel* shown on the display must no longer change.
- Drive the car downwards until the buffer is "free" again.
- Select `Teach Top E/S Pos.` and confirm with Enter.

▶ *Teach* top floor

- Drive car downwards into the *Top end floor* position.
- Select `Teach Top Floor` and confirm with Enter.

▶ Teach *top inspection end switch*

If protected space supports or suchlike are present, the "top inspection end switch" is to be taught so that the car does not touch the support and an evacuation route from the car roof with a clear opening of at least 0.5 × 0.7 m between shaft door and car door transom is ensured. In addition, crushing hazards posed by a missing counterweight guard may have to be taken into account.

- Select `Teach Top Insp. E/S` and confirm with Enter.

In every case, the inspection end switch function must be taught – even if this is not necessary due to "natural" protected space, for example. The standard position for the inspection end switch must be at approx. 50 mm before "level". This position must not be the same as the level position of the top floor of S2!

- Switching off installation mode,

▶ In the FST, check if the taught positions are entered in the correct sequence.

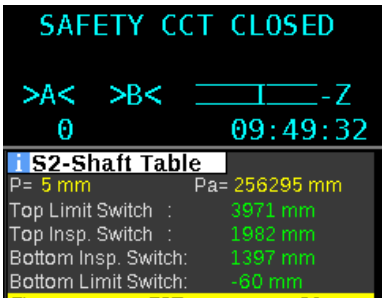

Example: Positions shaft table

9.5.7 Checking inspection end switches (commissioning step 16)

If inspection end switches are required, they must be checked at this point.

Perform the check of both inspection end switches separately.

Requirements

› Traction is ensured.

› The folding supports (if present) are installed, checked and folded out.

› The emergency stop switch of the inspection pod is wired in the safety circuit and checked.

› When pressed, `emergency stop` must appear in line A of the FST display.

› The inspection control is checked.

› The switching of the inspection speed to max. 0.3 m/s at the shaft ends (EN81-20, 5.12.1.5.2.1 f) is correctly set in the FST and checked:
`Main menu/Positioning/Global/Inspect.Fast 2000mm`

Procedure

► Move the car with *Pit inspection control* to *inspection end switch DOWN*.
The car must stop at the taught position.

Ensure that the S2 safety system has caused the stop via the SHK relay (and not only the FST). The SHK contact must open.

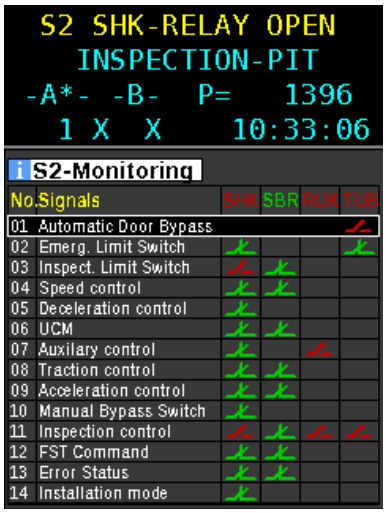

SHK contact open (red)

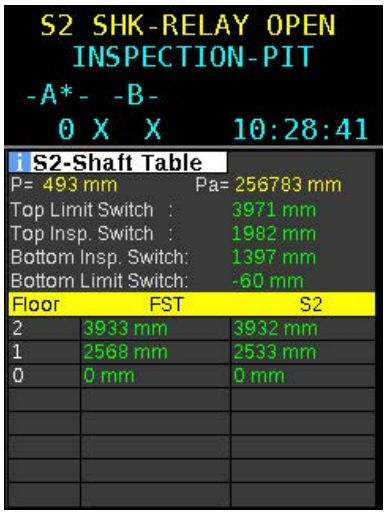

Taught position

► Move the car out of the inspection end switch.
The car must be able to move out of the inspection end switch in the opposite direction.

► Move car with *car inspection control* into *inspection end switch UP*.

► Test upwards direction the same as with *end switch DOWN*.

9.5.8 Checking access monitoring (commissioning step 17)

If access monitoring is required, it must be checked at this point.

Perform the check of both shaft ends separately.

Requirements

› Doors are installed

› Door inputs (triangular contacts) are correctly wired; bridges are removed

Procedure

▶ Open and close the shaft door to the protected space (usually with the aid of a triangular wrench key).

▶ Check that all relevant contacts of the access doors are connected in series.

▶ Check the status of the access monitoring via S2 I/O status.

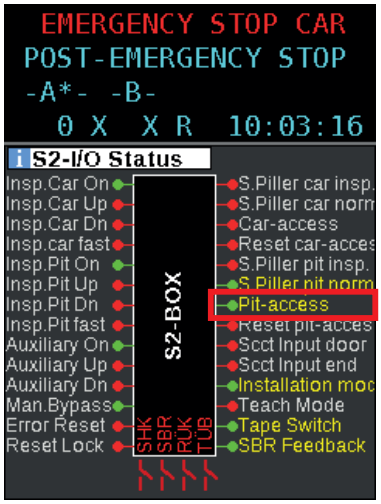

Access to car triggered:
`Pit-access` = yellow,
Line A must change status from `CLOSED` to `S2 SHK RELAY OPEN`.

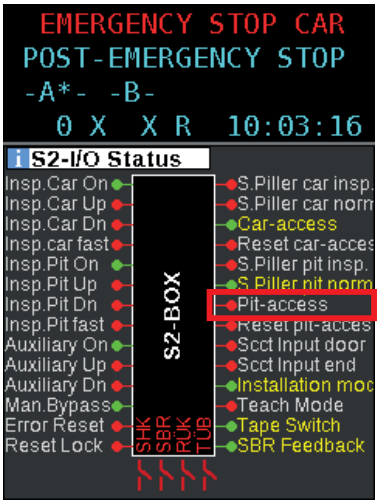

Access to pit triggered:
`access` = yellow,
Line A must change status from `CLOSED` to `S2 SHK RELAY OPEN`.

▶ Reset access monitoring using the button **S256 FK** or **S256 SG or S256** provided for this purpose. Hold the button down until `Hold SG/FK RESET` in line B of the display disappears.

▶ Check the status of the access monitoring via FST display.

- The reset input is yellow during actuation.
- The safety circuit status must change from `S2 SHK RELAY OPEN` to `CLOSED`.

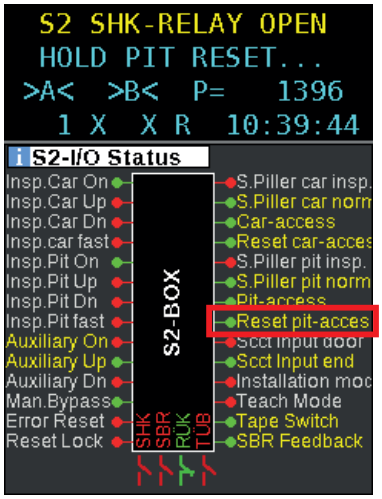

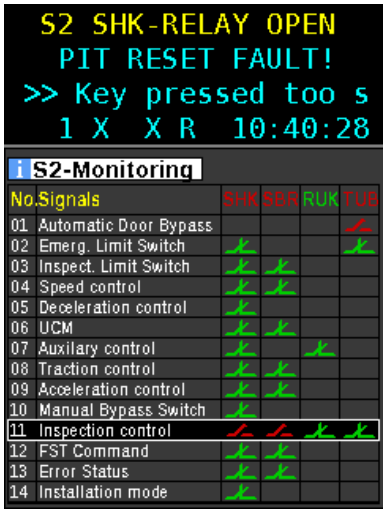

In evacuation operation (passenger evacuation by lift attendant), in the case of a combination of *machine room-less lifts* and *reduced protected spaces*, the integration of the S2 SHK contact in the power circuit of the brakes or emergency lowering valves (if present) ensures that a car movement cannot occur when the access monitoring has been triggered.

Test procedure for machine room-less cable lifts (MRL cable)

- ▶ Switch off *MAIN SWITCH*
- ▶ Switch on **evacuation switch**:
  Wait until the control system has booted up:
- ▶ Press brake release button **A** and **B**, if necessary **anti creep device button**, together.
  The car must move in one direction:
- ▶ Trigger access monitoring:
  Actuate emergency release monitoring on an appropriate shaft door.
- ▶ Actuate brake release button **A** and **B** and, where applicable, the **anti creep device button** together:
  The car must not move.

The sequence in which the main switch and evacuation switch are switched off and on may differ as a result of the different brake actuations. Observe the respective evacuation instructions for the installation.

9.5.9 Carrying out calibration drive

Requirements

› The FST can move the car with nominal speed.

› A drive can be performed between the end floors

▶ `Configuration/Installation/Calibration drive/Yes`

Do not start the calibration drive from a level position, but between two floors instead.

Otherwise the calibration drive will be prevented by the error `DRM ZONE ERROR`.

The deceleration distances of all possible drive speeds are determined during the calibration drive. The switch-off points for all speeds are calculated using these measured values.

Four measurement drives are carried out automatically for each drive speed.

› `CALIBRATION-START` flashes several times in line B of the FST-3 display.

› During the measurement drives, a scrolling text is displayed in line B. This text provides information on the total number of calibration drives and on the currently performed calibration drive.

› If the measurement drives were successful, `CALIBRATION-OK` flashes several times in line B.

If the calibration drive is not completed successfully despite a number of attempts, the controller is unable to determine the deceleration distances for the different speeds.

The deceleration distances of the individual speeds must then **and only then** be adjusted manually.

Manual adjustment of the deceleration distances - only use if the calibration drive was not successful!

The controller requires the approach distance for each drive speed as well as the levelling distance for each floor according to the following figure:

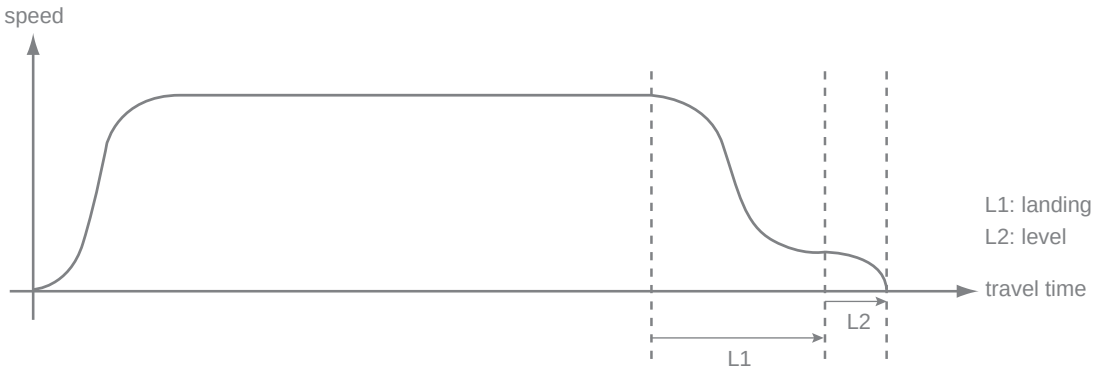

Drive curve with approach distance and level position value

Manual adjustment of the approach distance

► Select MAIN MENU / Positioning / Landing.

Landing [V1] shows the approach distances for speed V1 in both directions.

► Select desired speed with Enter.

► Select the individual figures with ◄ ► and adjust the respective figure with ▲ ▼.

The approach distances are at their optimum if a crawl drive of approx. 100 mm can be observed during each drive.

Manual adjustment of level position values

► Select MAIN MENU / Positioning / Floor / Level UP or Level DOWN.

Floor [00] shows the level position values for both directions.

► Select desired speed with Enter.

► Select the individual figures with ◄ ► and adjust the respective figure with ▲ ▼.

The level position values are at their optimum when a positioning accuracy of Pd = ±2 mm can be achieved with every drive (see next step: "Checking positioning accuracy")

9.5.10 Checking positioning accuracy

The Pd-value indicates whether the drive actually moves its specified distance to exactly within 0 mm. The current physical level position is not relevant at this point in time!

As the intermediate floors have not yet been taught, it is only possible to drive to the end floors, otherwise the message `DRM ZONE ERROR` ***appears. Alternatively, TEACH MODE can also be activated for this check.***

► Use [Shift]+[◄] to set "`Pd = ...`" in line C.
► Select `TEST MENU / TEST Drive ON`.
► Approach any 2 floors once from above and below.
► Approach the bottom floor from the top floor.
► Approach the top floor from the bottom floor.
► In case of short floor stops, approach each of them once from above and below

If the deviation of the Pd value for each floor is less than or equal to ±2 mm, the calibration drive has been completed successfully and the level position values have been set correctly.

If the deviation is greater:

► Check drive settings
► Check positioning accuracy of motor
► Check load dependency of motor
► Check slippage in positioning system (magnetic tape, bracket, etc.)
► Readjust level position values (*see Manual adjustment of the deceleration distances - only use if the calibration drive was not successful!, page 98*)

9.5.11 Checking the trigger speed (commissioning step 18)

Prior to checking pre-triggering (115%) and trigger speed (125%), installation mode must be deactivated. At that point, FST and S2 safety system both switch to normal operation.

Requirements

› A calibration drive was performed.

› The FST can move the car with nominal speed.

› A drive can be performed between the end floors

TEST Over-speed pre-triggering (115%)

Move the car into an end floor.

▶ Perform the *test command for pre-triggering (115%)* via the FST menu `Configuration/Installation/S2-System/S2-Test Functions/Test S2-Over-speed` (halving of the pre-triggering).

▶ Perform a movement with nominal speed to the opposite floor.
The car is set into motion and is stopped by the opening of the *SHK relay*.

▶ Check the triggering of the SHK relay in the `S2 I/O status`:
The SHK relay must be `OPEN` (red). After approx. 12 seconds, the relay changes from `OPEN` (red) to `CLOSED` (green).

▶ Check trigger speed in the `S2 speed control` to see if it has triggered at half the pre-triggering speed (V_{Nom} + 15%/2).

▶ Switch off `test Overspeed`.
`Configuration/Installation/S2-System/S2 test functions/Reset S2-Tests`

▶ Reset the error with **S2 reset**.

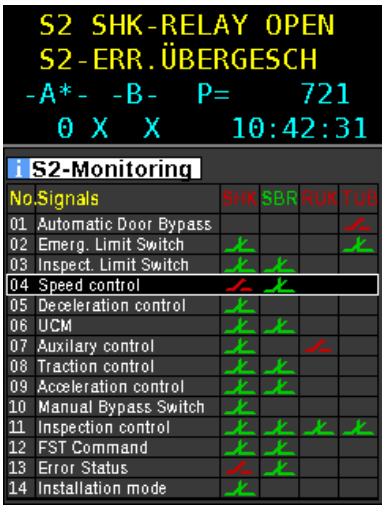

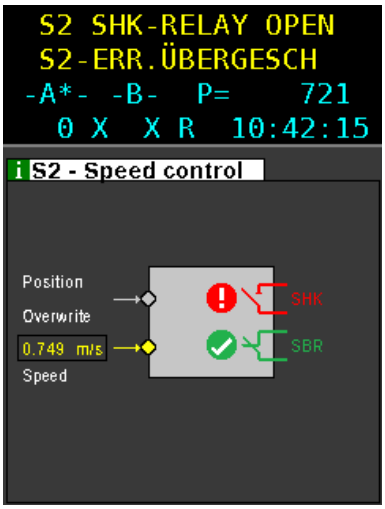

TEST S2 speed limiter (125%)

P

- ▶ Move the car into an end floor.
- ▶ Perform the *test command for speed limiter (125%)* via the FST menu `Configuration/Installation/S2-System/S2 test functions/Test S2-OSG Func.` (halving the trigger speed).
- ▶ Perform a movement with nominal speed to the opposite floor.
- ▶ In the guide menu `S2 I/O status`, open the trigger for `S2 Speed control`.
- ▶ Perform a movement with nominal speed to the opposite floor.
  The car is set into motion and is stopped by the opening of the *SBR relay*.
- ▶ Check the triggering of the SBR relay in the `S2 I/O status`:
  The SBR relay must be `OPEN` (red).
  The relay opens for approx. 0.5 seconds. The error message: `S2-ERR.SPEED CTRL. follows.`
  The *S2* is therefore blocked. No drives are possible
- ▶ Check trigger speed in the `S2 Speed control` to see if it has triggered at half the Overspeed (V_{Nom} + 25% / 2).
- ▶ Check if a *loss of traction* was detected by the S2 safety system prior to the triggering of the *Overspeed limiter* safety function.
  In this case, the test is invalid and must be repeated. (This safety function would distort the measured trigger speed due to a premature opening of the safety brake.)
- ▶ Reset the error with **S2 reset**.

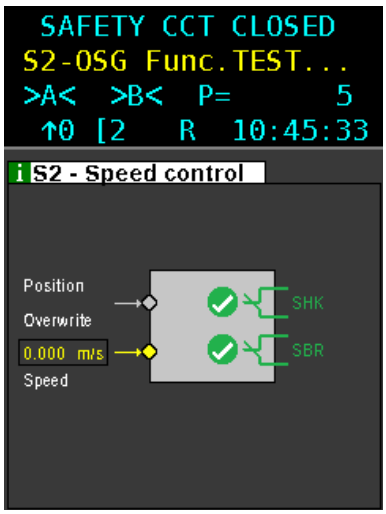

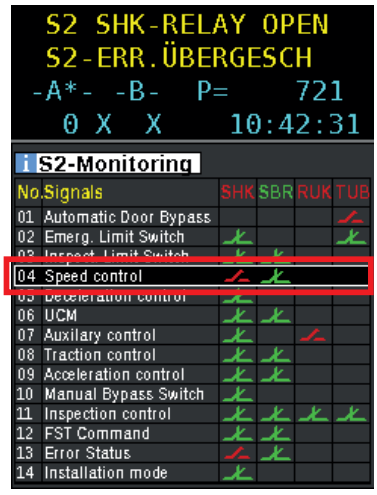

9.5.12 Checking deceleration monitoring (commissioning step 19)

The deceleration monitoring must be checked if a shortened buffer (the buffer is not configured for the nominal speed) is present at at least one of the shaft ends. ***This function is possible from a buffer speed of 1.25m/s***

Perform the check of both shaft ends separately.

Requirements

› FST-3 and S2 safety system are in normal operation

› The FST-3 can move the car with nominal speed

› A drive can be performed between the end floors

The deceleration monitoring is checked in two stages. In the first stage, the test is performed with a virtual buffer and, after evaluating the test results, the approach behaviour of the car or the approach deceleration saved in the S2 safety system might be adjusted. The virtual buffer is defined so that the actual buffer is moved virtually into the centre of the shaft. The car must be decelerated to buffer speed at the position of the virtual buffer. All other reference points (such as the end floor to be checked) are virtually shifted towards the centre of the shaft by the same amount. In the second stage, the deceleration monitoring is verified with the actual buffer.

Stage 1 procedure

SK/SG deceleration monitoring test (virtual buffer)

► Move car into the opposite end floor of the shortened buffer.

► Start test function for the virtual buffer test via the FST menu:
`Configuration/Installation/S2-System/S2 test functions/Test Decl. VBuffer/YES`

Start a drive with nominal speed into the end floor to be tested using the **UP** and **DOWN** arrow keys.

The S2 deceleration monitoring opens the safety circuit roughly in the centre of the shaft by means of the SHK relay if the calculated braking distance is greater than or equal to the distance to the virtual target floor.

► In the `Guide/S2 monitor/Deceleration control` check the following:

- The trigger speed is equal to the nominal speed.
- `Speed at X.XX m/s`
  If it was not triggered at the nominal speed, the approach deceleration must be adjusted in the S2 safety system, *see Check the set speeds of the frequency inverter or similar with the system data.Setting and checking the safety parameters of the S2 system (commissioning step 3), page 73*.
- The SHK relay is triggered.
  `SHK contact is open (red)`
- Check the calculated braking distance with the actual distance of the relevant previous floor to the buffer:
  `Braking distance tripping → Stop: XXXX mm` (equates to measured braking distance)
  `Min. distance Tripping → Buffer: XXXX mm` (equates to calculated minimum braking distance; this must not be undershot!).
  If the car has already reached the position of the virtual buffer or exceeded it, therefore being greater than the "actual" distance, the approach deceleration must be adjusted in the S2 safety system, *see Check the set speeds of the frequency inverter or similar with the system data.Setting and checking the safety parameters of the S2 system (commissioning step 3), page 73*.

  This may also necessitate a change to the approach behaviour of the car. If a change (approach behaviour or parameter *approach deceleration*) was necessary during the test, you must start the checking of the *virtual buffer, stage 1* deceleration monitoring again.
- Reset test "`Test Decl.VBuffer`":
  `Config/Installation/S2-System/S2 test functions/Reset S2 test`

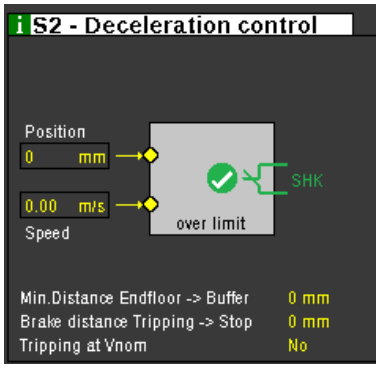

Example

Stage 2 procedure

SK/SG deceleration monitoring test (actual buffer)

- ▶ Move car into the opposite end floor of the shortened buffer.
- ▶ Start test function for the actual buffer test via the FST menu:
  `Configuration/Installation/S2-System/S2 test functions/Test Decl. RBuffer/YES`
- ▶ Select a drive with nominal speed into the end floor to be tested using
  `TEST MENU/Buffer Test Up` or `Buffer Test Down` with the **E button** and keep the button pressed.
  Releasing the button will abort the test!

  The S2 deceleration monitoring opens the safety circuit by means of the SHK relay if the calculated braking distance is greater than or equal to the distance to the target floor.
- ▶ In the `Guide/S2 monitor/Deceleration control` check the following:
  - The trigger speed is equal to the nominal speed.
    `Speed at X.XX m/s`

    If it was not triggered at the nominal speed, the approach deceleration must be adjusted in the S2 safety system, *see Check the set speeds of the frequency inverter or similar with the system data.Setting and checking the safety parameters of the S2 system (commissioning step 3), page 73.*

    In this case, you must start the checking of the *Stage 1* deceleration monitoring again.
  - SHK relay is triggered.
    `SHK contact is open (red).`
  - Check the calculated braking distance with the actual distance of the relevant previous floor to the buffer:
    `Braking distance Tripping → Stop: XXXX mm` (equates to measured braking distance)
    `Min. Distance Endfloor → Buffer: XXXX mm` (equates to calculated minimum braking distance; this must not be undershot!).
    If the car has already moved to the actual buffer, the approach deceleration must be adjusted in the S2 safety system, *see Check the set speeds of the frequency inverter or similar with the system data. Setting and checking the safety parameters of the S2 system (commissioning step 3), page 73.*

    This may also necessitate a change to the approach behaviour of the car. If a change (approach behaviour or parameter *approach deceleration*) was necessary during the test, you must start the testing of the *virtual buffer, stage 1* deceleration monitoring again.
  - Reset test "`VP approach decel. test`":
    `Config/Installation/S2-System/S2 test functions/Reset S2 test`

9.5.13 Checking the pre-triggered stopping system protected space version (commissioning step 20)

If a pre-triggered stopping system is required, it must be checked. The check is performed as per EN81-21, 6.2 (checking the lift before commissioning).

- ▶ Move the empty car to the opposite floor.
- ▶ Activate `Menu/Configuration/Installation/S2-System/S2 test functions/Test Pre.Trig Down` in the FST.
- ▶ In the S2 guide monitor, select `inspection end switch`.
- ▶ Enter the **DOWN** command.
  The *SBR relay* opens when the position of the *bottom inspection end switch* is overrun.
- ▶ Check if the triggering has occurred at nominal speed and through the VA function (error message `S2-ERR.VA`) of the S2.
- ▶ Check if the VA system has mechanically triggered (see VA system operating instructions).
- ▶ Check that the protected space in the shaft pit meets the requirements, see e.g. system drawing.
- ▶ Acknowledge the error message `S2-ERR.VA` with **S2 RESET**.
- ▶ If necessary, perform the VA system for *top protected space* the same as for *bottom protected space*.

9.5.14 Checking emergency end switches (commissioning step 21)

Both emergency end switches are to be checked using the integrated test functions of the FST.

- ▶ `Select Test menu / Endswitch test Top` or `Endswitch test Bot.`

Perform the check of both emergency end switches separately.

- ▶ `Select Test menu / Endswitch test Top` or `Endswitch test Bot.`
  At this point, the car drives at nominal speed into the respective end floor and then continues at reduced speed into the end switch.
- ▶ Check trigger position using the FST display.
- ▶ Check function of the emergency end switch in the S2 monitor

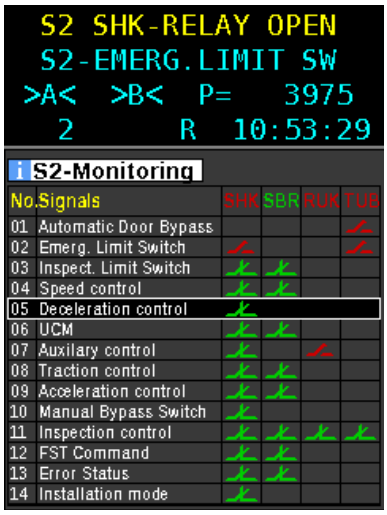

02 emergency end switch must be red (contact open) and `S2 SHK RELAY OPEN / S2 EMERGNECY LIMIT SWITCH` must appear.

- ▶ Drive car away with the auxiliary mode control.
- ▶ Switch off auxiliary mode control and perform an FST RESET in the test menu.

9.5.15 Checking the bypass switch (commissioning step 22)

This checks if driving movements of the car are prevented during activated bypass control when inspection and auxiliary mode are not active.

Perform the check for every position of the bypass switch.

Requirements

› Bypass switch is switched off

› Operating mode of the S2 is normal operation

Procedure

► Check if normal operation is possible.

► Switch on bypass switch.

► Check if the display in line A changes from `CLOSED` to `S2 SHK RELAY OPEN` and the bypass input is yellow when the bypass switch is actuated.

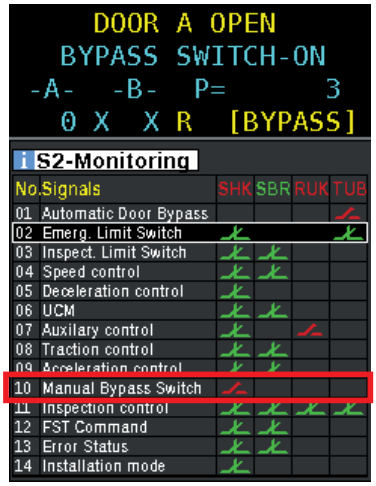

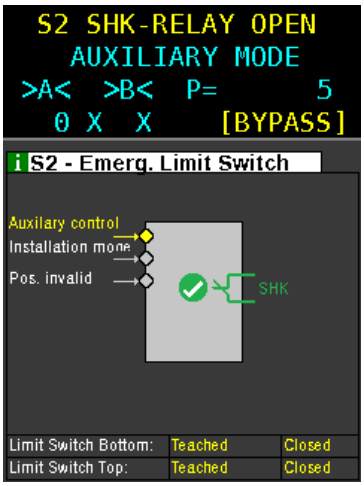

► Switch off bypass switch.

9.5.16 Setting the door zone length (commissioning step 23)

The length of the door zone depends on the door unlocking vane, cam and UCM stopping distance. The standard setting is 200 mm. If this length differs from the actual conditions, the *Cfg DoorZone* parameter must be adjusted.

Requirement

› Teach mode is switched on

Procedure

▶ In the FST menu, select the *Cfg DoorZone* submenu:
`Configuration/Installation/S2-System/Config Door Zone/000`

▶ Enter the vane and cam length or the result of the UCM stopping distance calculation in millimetres

▶ Confirm the prompt `Are you sure?` with `Yes`.

▶ Check the entered value in the guide menu:

- Open S2 info: `Func/Arrow UP-DOWN/S2 Info/Door Zone length:XXX`.
- The value of the zone length must match the value set in the FST menu.

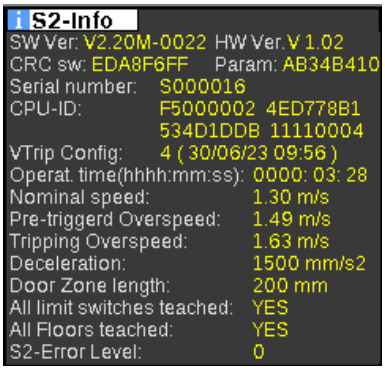

▶ Switch off teach mode to save the value permanently

9.6 Teaching and checking the floors (commissioning step 24)

Requirement

› All floors are configured in the FST.

› The FST can approach all floors (without door bypassing).

› A functioning car operating panel is present.

Procedure

▶ Set `Configuration/Installation/Correct-Level-COP/Yes` in the FST.

▶ Switch on teach mode.
In the FST, this is shown in line D with `TEACH MODE S2`.

▶ Approach every floor by means of car calls.

9.6.1 Levelling adjustment

Correct the level position

Three options are available for the levelling adjustment:

› Via the FST-3 controller
Note the positioning accuracy of each floor in order to be able to subsequently make the adjustments on the controller.

› Via the LBG hand-held terminal
connect the HHT to the bus module in the car. Now you can enter corrections directly and conveniently from the car.

› Via the FPM-1 / FPM-2
If position indicators are installed in the installation NEW *LIFT*, you can enter corrections directly and conveniently from the car or via the FPM-1 or FPM-2.

A levelling adjustment can only be performed if a sufficient positioning accuracy (Pd value) of 2 mm is ensured!

► On the FST-3 controller, check the Pd value on all floors (see *see 9.5.10 Checking positioning accuracy, page 99).* Level adjustment in the car can only take place when the PD value is less than or equal to 2 mm (optimum value: 0 mm)!

The levelling adjustment always applies to the floor on which the car is located at the time the correction is made.

9.6.2 Level adjustment via FPM-1 or FPM-2.

► `Select MAIN MENU / Config / Installation / Correct-Levels-COP / ON` on the FST-3.

After activating parameter `Correct-Levels-COP-2`, the landing control is disabled and the car remains stopped on the floor with open car doors. Line B of the FST-3 display shows "`Correct-Levels-COP`" and the car operating panel is released for level adjustment. The following buttons on the car operating panel can now be used for levelling correction:

Car panel button	EAZ display	Function
◁▷	--	Press down the door open button for three seconds: adjustment mode is activated, the floor position indicator displays "--". In adjustment mode, all drives (including re-levelling) are suppressed.
◁▷	09 ↓	**Car too low:** Enter the measured value in mm by successively pressing the **door open button**. The floor position indicator displays the entered value with a down arrow (too low). Here: 9 mm too low
-1	08 ↑	**Car too high:** Enter the measured value in mm by successively pressing the **car call for the bottom floor**. The floor position indicator displays the entered value with an up arrow (too high). Here: 8 mm too high.
3	20 ↑	Pressing a higher car call (floor 01 or higher) activates the entry in 10 mm increments (car call 01 is acknowledged). Again pressing a higher car call activates the entry in mm increments (car call 01 is not acknowledged).
◁▷	OK	Press down the door open button for three seconds: Adjustment mode is activated, the floor position indicator displays "OK". Use the car call to move to the next floor at which corrections are to be made. There, adjustment mode can again be activated.

After the FST-3 has been switched off and on, the lift automatically switches to normal operation.

- Each floor is approached with a car call and the positioning accuracy measured.

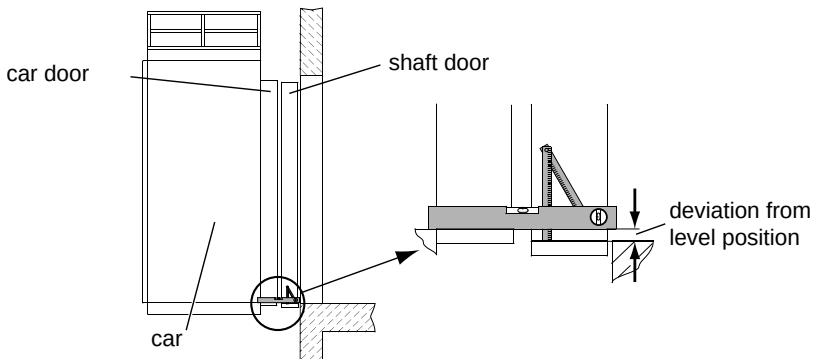

Measuring car deviation relative to level position

- Approach the floor again and check levelling.
  If levelling is OK, the teaching of the door zone for this floor can occur.

▶ Teach door zone for this floor:

- **Press the Door OPEN** button and hold it down for 3 seconds until the acknowledgement lamp of the floor in which the car is located lights up.
- **Press the Door OPEN** button again until the acknowledgement lamp goes out.

▶ Perform levelling check and teaching of the door zone for all further floors.

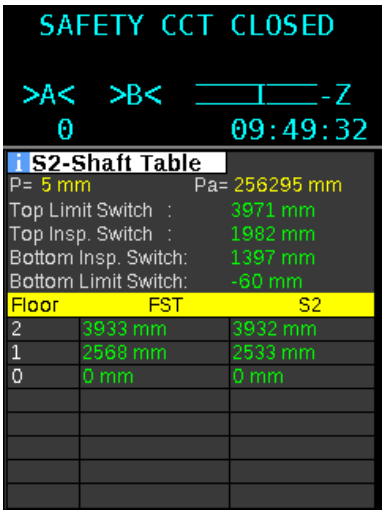

Example

▶ Read out the S2 shaft table via the FST to check if all positions in the shaft table of the S2 safety system have been entered and if the number of floors is correct.

IMPORTANT!

If the values in the S2 column are green, this means that the taught positions are within the 50 mm tolerance range of the values in the FST column, i.e. the values are OK.

▶ If the values are yellow, then the taught positions are outside of the tolerance, i.e. the door zone message is not provided. The error message appears `DRM ZONE ERROR.`
This means zone teaching is required once more!
Approach floor and press **Door OPEN** button for 3 seconds until the acknowledgement lamp of the car call button lights up.

▶ Press the **Door OPEN** button again, until the acknowledgement lamp goes out.

If all floors have been correctly taught:

▶ Switch off TEACH mode to save the values permanently

Attention!

- ***Check the "Unintended movement with opened doors" safety function before you start a normal drive. (The controller would be ready for normal drive at this point in the commissioning process. Test step 25 must be performed first, however.)***
  See Chap. 9.6.3 Checking unintended movements (UCM) (commissioning step 25), page 109
- ***Switch off the landing control and lock the doors.***

9.6.3 Checking unintended movements (UCM) (commissioning step 25)

The *unintended movement with opened doors* safety function is checked using the integrated test function of the FST.

Procedure

- Check teh basic settings of the FST-3: `Doors/Doors Basic/Pre-Opening/Yes`
- Select a test floor and place the car at this floor. This stop should correspond to the most unfavorable load case for the planned test.
- In the FST test menu, start the required test command: `TESTMENUE/UCM-A3 Test UP` or `DOWN`. The FST then starts a run with maximum acceleration up to the nominal speed nominal speed.
- The car travels a short distance and then stops
- As soon as the car is stopped, check the following:
  - "FST-Guide "S2-Monitor": Has triggered the UCM safety function "06 UCM A3", the SHK relays and SBR relays have been opened, contacts must be open and shown in red be displayed in red
  - Has the actuator provided for the UCM safety function been triggered?
  - If the FST shows a UCM error: `S2-Error.TRACTION/UCM`?
  - Does the position at which the car is located `PD= XXXX` correspond to the expected value?

- Reset by S2 RESET required, then press S256 if necessary
- Perform the test in the opposite direction
- Drive to all floors and use the S2 shaft table (see page 108) to check the values P= XXXXXXmm, FST and S2 of the respective floor for conformity. The maximum deviation may be be 50mm Normal operation (commissioning step 26)

9.6.4 Normal Mode (commissioning step 26)

- Switch on the landing control and unlock the doors.

The system is now fully functional.

9.7 Setting control options

9.7.1 Optimising re-levelling

Re-levelling performance can be optimised with the following parameters found under `MAIN MENU / Positioning / Re-levelling Limits`.

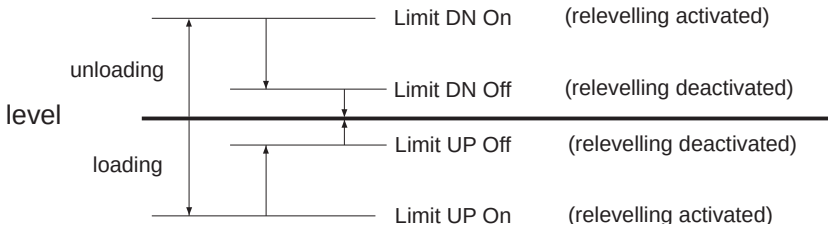

Definition of re-levelling parameters

Activation of re-levelling can be delayed by the time set in `MAIN MENU / Drive / Re-levelling Delay`.

Adjusting re-levelling limits ⛔

`MAIN MENU / Positioning / Re-levelling Limits / Limit UP ON` or `Limit UP OFF`

Set parameter `Limit UP ON` to approx. 20 mm.

For hydraulic systems, actuate the emergency drain valve or the hand pump; for cable lifts, actuate the auxiliary control and move the car 21 mm over level. Switch off the auxiliary mode. The drive will now readjust.

Use [Shift]+[▶] to set "`Pd = ...`" in line C.

› If `Pd=0`, readjustment is optimally set.

› If `Pd=-x`, the drive stops too early

▶ Increase the value of `Limit UP OFF`

› If `Pd=x`, the drive stops too late

▶ Reduce the value of `Limit UP OFF`

Perform these settings in an analogous way for `MAIN MENU / Positioning / Relevelling Limits / Limit`

9.7.2 Crawl drive

Setting crawl drive ⛔

▶ `MAIN MENU / Positioning / Global / Crawl Distance`

▶ Select the individual figures with [◀] [▶] and adjust the respective figure with [▲] [▼].

▶ Confirm selection with [Enter]

▶ Exit menu and save settings with [◀].

9.7.3 Door times

The function of the different door times is shown in the following diagram:

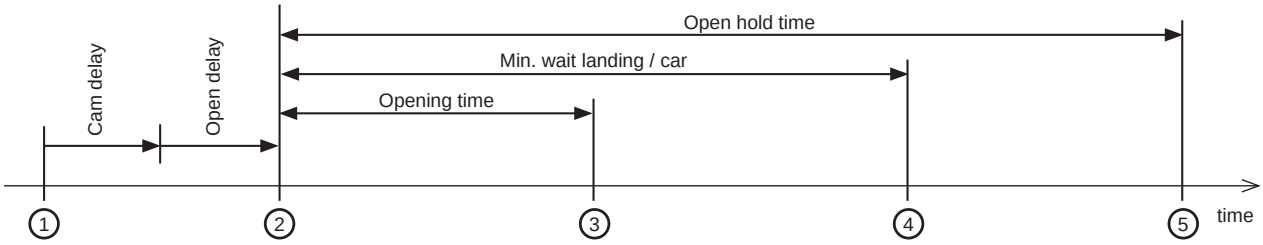

1. Car has reached level position, drive has stopped (resp. car has reached door zone)
2. Car door(s) start opening
3. Car door is fully open (the opening time should be adjusted to 20sec. for doors with limit switches)
4. Car door starts closing again, if there are further calls
5. Car door starts closing again, if there are no further calls

Door times diagram

Setting opening time

Opening and closing time for doors without end switches.

▶ MAIN MENU / Doors / Doors-Selective / Opening Time

▶ Select the individual figures with ◀ ▶, adjust the respective figure with ▲ ▼ and confirm with Enter

▶ Exit menu and save settings with ◀.

Setting open hold time

Opening period is the time doors remain open when there is no car or landing call.

▶ MAIN MENU / Doors / Doors-Selective / Open Hold Time

▶ Select the individual figures with ◀ ▶, adjust the respective figure with ▲ ▼ and confirm with Enter

▶ Exit menu and save settings with ◀.

Setting reversing time

After a reversing cycle, the door is kept open for the time set under Reversing Time.

▶ MAIN MENU / Doors / Doors-Selective / Reversing Time

▶ Select the individual figures with ◀ ▶, adjust the respective figure with ▲ ▼ and confirm with Enter

▶ Exit menu and save settings with ◀.

Setting change delay

Change delay is the interval between a change of direction of moving doors.

▶ MAIN MENU / Doors / Doors-Selective / Change Delay

▶ Select the individual figures with ◀ ▶, adjust the respective figure with ▲ ▼ and confirm with Enter

▶ Exit menu and save settings with ◀.

Setting minimum wait landing

Minimum wait time on a floor with pending in landing calls.

▶ MAIN MENU / Doors / Doors-Selective / Min.Wait Land ADR

▶ Select the individual figures with ◀ ▶, adjust the respective figure with ▲ ▼ and confirm with Enter

▶ Exit menu and save settings with ◀.

Setting minimum wait car

Minimum wait time on a floor with pending car calls.

▶ MAIN MENU / Doors / Doors-Selective / Min.Wait Car

▶ Select the individual figures with ◀ ▶, adjust the respective figure with ▲ ▼ and confirm with Enter

▶ Exit menu and save settings with ◀.

9.7.4 Password

The FST-3 controller is password protected to prevent unauthorised manipulation of control parameters and endangerment of persons or impairment of the lift system resulting from unauthorised manipulation. Three security levels are available for commissioning, customer service and maintenance.

Security levels

No.	Access	Activity
1	High	Commissioning
2	Medium	Customer service
3	Low	Maintenance

The password of the FST-3 controller has four digits. The password is set to "0000" on delivery.

Setting the password

▶ MAIN MENU / System / Password setting / High

▶ Select the individual figures with ◀ ▶ , adjust the respective figure with ▲ ▼ and confirm with Enter.

▶ Exit menu and save settings with ◀.

The same procedure is used for the other levels.

Locking the main menu

▶ Select MAIN MENU / Lock Menu and activate passwords with Enter.

▶ Exit menu and save settings with ◀.

The password must be entered the next time you change from the main screen to the main menu.

9.8 Test actuation and checking monitoring functions in accordance with EN81

Unless otherwise noted, you can reset the following errors by performing a fault reset in the test menu (▶ + Enter) or by switching controller fuse "F4" OFF / ON.

Contactor monitoring test

If the car moves out of the level position of if the drive contactors have not triggered after an adjustable time, the FST-3 brings the lift system to a standstill in accordance with EN81/12.7. Error message `DRM CONTACTOR MONIT.` is displayed.

Test actuation:

› Prevent the contactor monitoring contact or the contactor itself from activating. Important! Hold pressed down for at least 2 sec.

Brake monitor test

For cable lifts, the function of the electric brake can be monitored either separately or together for brake A / B. If, upon start of movement, the brake is not vented after an adjustable time or if the brake is not closed upon stopping, the lift comes to a standstill at the next floor and error message `DRM-BRAKE FAILURE` is output.

Test actuation:

› Prevent brake monitoring contacts on the drive or brake contactor from closing and opening.

› Enter a drive command.

› Upon completion of the drive, message `DRM-BRAKE FAILURE` appears

Runtime monitoring

If, during a drive, the car comes to a standstill outside of the target position in spite of the drive being controlled or if the position messages of the car are implausible, the FST-3 brings the lift system to an immediate standstill. Fault message `DRM-DRIVE MONITOR` is displayed.

Test actuation:

› `TEST MENU / DRM Test`

End switch test

A function test of the emergency end switch can be performed by means of test drive `Endswitch. Test Top` and `Endswitch Test Bot`. To start an end switch test drive, the car must be at least one floor from the test end floor.

The end switch test occurs at approach speed, i.e. the car reduces the speed as with a regular drive, but ignores the levelling reference. If the emergency end switch is functioning correctly, the FST-3 display shows the message `S2-EMERGENCY END SWITCH` in line B.

Test actuation with cable lifts

› `TEST MENU / End switch Test Top`

› The car drives to the top end switch, where it comes to a standstill. `EMERGENCY STOP` or `EMERGENCY STOP CAR appears in the display.`

› The error can be reset by moving the car outside of the actuation range of the end switch by means of the auxiliary control.

› `TEST MENU / Endswitch Test Bot`

› The car drives to the bottom end switch, where it comes to a standstill. `S2-EMERG. END SWITCH appears in the display.`

Test actuation with hydraulic lifts

› `TEST MENU / End switch Test Top`

› The car drives to the top end switch. `EMERGENCY STOP` or `EMERGENCY STOP CAR appears in the display.`

› As soon as the car is moved outside of the actuation range of the end switch as a result of emergency drainage or leakage in the hydraulic cylinder, it drives to the bottom end switch, where it comes to a standstill. `DRM-EMERG.LIMIT SW appears in the display.`

The switching point of the end switch can be determined by reading the "Pd" value in the FST-3 display. Shift ***+*** ▶ ***until "Pd" appears.***

Buffer drive test

During the buffer drive, the car moves **immediately** against the removable bumper at **nominal speed**!

Provided that safety switches are installed on the buffer, the safety circuit, if functioning properly, is interrupted upon operation of the switch. `EMERGENCY STOP` then appears in the first line of the FST-3 display.

To start a buffer drive, the car must be at least one floor from the test end floor.

Test actuation:

› `Select TEST MENU / Endswitch Test Top`, press Enter and keep pressed down until the car comes into contact with the buffer.

› `EMERGENCY STOP appears in the display`

› The error can be reset by moving the car outside of the actuation range of the end switch by means of the auxiliary control.

Motor temperature monitoring test

If an operational fault occurs at the drive (e.g. due to overheating), it can be reported to the FST-3 via the motor monitoring input.

If the car is in motion, the drive is ended at the next floor in the current direction of travel and the lift is brought to a standstill for the duration of the operational fault. `DRM-MOTOR FAILURE` appears in the display.

>In case of oil-hydraulic installations, the car is moved to the bottom floor prior to shutdown.

Test actuation:

› Disconnect the PTC resistor sensor during a drive.
› This error is reset by connecting the temperature sensor.

Emergency light and emergency call test

To test the emergency light and the emergency call, park the lift with open doors on any floor. Switch off the controller fuse and light the fuse. The emergency light in the car must then illuminate. Now press the emergency call button in the car, in the shaft pit or on the car roof to test the emergency signal.

UCM-A3 test upward

› See test step 25

UCM-A3 test downward

› See test step 25

UCM-A3 test actuator

With this command, the specified 10 test drives are performed automatically. During the test drives, the message "A3 actuator test running" is displayed on the second line of the FST display. Total of 10 drives". During these test drives, the doors are automatically locked and no car/landing calls are enabled. If a DRM error occurs during the test drives, the test aborts automatically and "A3 ACTUATOR TEST ABORTED" is displayed. If, on the other hand, all 10 test drives are completed without errors, the message A3 ACTUATOR TEST OK" appears in the display. Upon completion of the test, the controller returns to normal operation.

UCM-A3 error reset

The menu item TEST MENU / UCM-A3 Err. Reset resets the UCM-A3 error.

CMM activation

CMM activation: CMM (Critical Module Monitoring) modules ensure monitoring of LON modules with critical
inputs, e.g. fire and smoke alarms, fire department key and super PRIO key (e.g. bed drive).

Detect modules:

Main Menu / Config / LON Configuration / CMM-generate list / YES

Critical Module = 1 means that a CMM module was found.

Activate modules:

Main Menu / Config / LON Configuration / CMM-activate / ON

Test modules:

Unplug LON bus plug to interrupt the bus connection to the CMM module. Error message DRM-CMM FAILURE occurs. As a result, a system stop forces the system to come to a standstill.

It may take up to 3 min for the error message to occur.

Checking operation of drive button (COMMON button)

- ► On the inspection control, set the inspection control switch to **I**.
- ► Press the **UP / DOWN** buttons one after the other.
  The car must remain stationary.
- ► Press either the **UP** button or the **DOWN** button while at the same time pressing the COMMON drive button, and hold down until the car moves in the corresponding direction.
- ► Release the drive button while the car is moving.
  The drive must stop.
  The message `EMERGENCY STOP CAR` must appear on the display of the FST-3 controller.

Checking shaft pit inspection control

- ► On both inspection controls (*car* and *pit*), set the inspection control switch to **I**.
- ► On both inspection controls, press the **UP / DOWN** buttons one after the other.
  The car must remain stationary.
- ► Travel should only be possible if the same direction of travel is activated at both inspection controls.
  The message `Inspection-FK + SG` must appear on the display of the FST-3 controller.

Checking return to normal operation after pit inspection

- ► On the *pit* inspection control, set the inspection control switch to **I** and then back to **0**.
- ► Make sure that
  - the emergency braking switch is not actuated
  - access to the shaft pit is closed and locked.
- ► Press the lift call button.
  The car must not move.
- ► Perform a reset.
  Travel must not be possible until the reset has been performed.

Reset using button code:

This method uses the landing call button on the lowest floor. The landing call button flashes once per second, thereby signalling readiness for the reset procedure.
Proceed as follows:

- ► Press the landing call button briefly 3 times (with an interval of at least 0.1 second between each press).
- ► Wait approx. 1 second.
- ► Then press the landing call button again briefly 3 times.

press briefly > press briefly > press briefly PAUSE press briefly > press briefly > press briefly

In the case of systems with two access points on the bottom floor, the reset procedure can be performed at both landing call buttons.

Checking operation of inspection speed at end floors

Reduction of the *inspection FAST speed* remains in the shutdown range even during departure.

- ► Move to an end floor until level or until travel stops automatically.
- ► Move out in the opposite direction using *Inspection FAST* until the deceleration point is exceeded.
  The *inspection drive FAST* must not become active until the deceleration point has been exceeded.

Checking light barrier test

Each time the door opens, the FST-3 controller expects the level of the light curtain signal to change. If this is not the case, a signal sounds each time the door opens; in addition, the door closes with reduced force.

- ► In the car top box of the *FSM-2*, connect terminals **8.1** and **8.2** using a wire bridge.
- ► Open the shaft doors manually.
  The message `DRM-Photocell ERR` must appear on the display of the FST-3 controller.
- ► Close the shaft doors manually.
  - »The message `Nudging` must appear on the display of the FST-3 controller.
  - »A signal must sound.
  - »The door must close with reduced force.

The monitoring function can be activated if required!

Checking operation of emergency light

- ► Disconnect the power supply cable from the light or
- ► switch off the supply voltage using the **RCBO F21** switch in the control cabinet.

The emergency light must light up automatically even if the power supply fails.

Checking operation of speed limiter contact latching

- ► Trigger the speed limiter either when stationary or when moving.
  The following message must appear on the display of the FST-3 controller:
  `DRM-Speed Governor.`
- ► Perform a RESET via the FST-3 TEST MENU:
  Arrow RIGHT / `Fault Reset` / **ENTER.**

Checking operation of arrest switch contact latching

Dangerous electrical voltage!
Touching electrically live parts either directly or indirectly can result in an electric shock.

Make sure that the system is disconnected from the power supply before beginning the function test.

- ► Using switch F4.1, disconnect the system from the power supply.
- ► At terminal strip **X100**, bridge terminals **21** and **22** using a wire bridge.
- ► At terminal strip **X40**, bridge terminals **98** and **99** using a wire bridge

or

- ► at terminal strip **X98**, bridge terminals **1** and **2** using a wire bridge
- ► Using F4.1, switch on the system.
- ► Trigger the speed limiter while in motion.
  One of the following messages must appear on the display of the FST-3 controller:
  - › `DRM Safety (Up)`
  - › `DRM Safety (Dn)`
  - › `DRM Safety ( - )`
- ► Perform a RESET via the FST-3 TEST MENU:
  Arrow RIGHT / `Fault Reset` / **ENTER.**
- ► Using **F4.1**, disconnect the system from the power supply.
- ► Remove the wire bridges again.

Checking residual current device for door drive

- ► Check the residual current device in accordance with *DGUV (German Social Accident Insurance) regulation 3* and enter the measured value in the test log.

Checking operation of bypass switch

Partially bridged safety circuit!
The bypass function allows the car to be moved with the safety circuit partially bridged.
Improper handling can result in persons being crushed or falling into the shaft. This can cause extremely

severe injury or death.

► Position the car in such a way that there is no danger of falling; block the shaft access points if necessary.
► Open the shaft door using the emergency key and hold open.
► Move the bypass switch from NORMAL to **SP** (door lock or shaft door lock).
The message
`S2 SHK RELAY OPEN as well as BYPASS` must appear on the display of the FST-3 controller.
Travel with inspection or auxiliary control should only be possible with the car door closed.
An acoustic signal sounds as soon as the car moves.
► Move the bypass switch to **FK** (car door contact) and repeat the test.
► Move the bypass switch to **DF** (manual door contact) and repeat the test.

Checking operation of door contact circuit monitoring

Dangerous electrical voltage!
Touching electrically live parts either directly or indirectly can result in an electric shock.

Make sure that the system is disconnected from the power supply before beginning the function test.

► Using **F4.1**, disconnect the system from the power supply.
► Test the door lock door circuit:
- At terminal strip **X14**, bridge terminals **1** and **4** using a wire bridge.
- Switch on **F4.1**.
- Using the buttons **Shift + UP** or **Shift + DOWN**, give the command to move to the next floor above or below.
  As soon as the door is completely open and a wait time of approx. 5 seconds has passed, the message
  `DRM-Door Bridged. Normal operation is not possible` appears on the display of the FST-3 controller.
- Perform a RESET via the FST-3 TEST MENU:
  Arrow RIGHT / `Fault Reset` / **ENTER.**
- Using **F4.1**, disconnect the system from the power supply.
- Remove the wire bridge again.

► Test the car door contact circuit:
- At terminal strip **X32**, bridge terminals **1** and **3** using a wire bridge.
- Using the buttons **Shift + UP** or **Shift + DOWN**, give the command to move to the next floor above or below.
  As soon as the door is completely open and a wait time of approx. 5 seconds has passed, the message
  `DRM-Door Bridged. Normal operation is not possible` appears on the display of the FST-3 controller.
- Perform a RESET via the FST-3 TEST MENU:
  Arrow RIGHT / `Fault Reset` / **ENTER.**
- Using **F4.1**, disconnect the system from the power supply.
- Remove the wire bridge again.

Checking maximum speed in auxiliary mode

The maximum speed during the auxiliary mode drive must not exceed 300 mm/s.

► Increase the auxiliary speed at the frequency inverter or
► Reduce the trigger threshold for the auxiliary speed at the FST-3 under:
`System / Factory Menu / Settings / V - Inspect.Max > 200mm/s.`
► Using the auxiliary control, continue to travel UP or DOWN until
- the speed threshold has been exceeded
- the message
  `REVISION TOO FAST` appears on the display of the FST-3 controller and
- the car stops.

► After the test has been completed, reset the parameters to their original values.

Checking operation of trapping protection with glass doors

► Perform the function test at your own discretion, e.g. using a rubber wedge.

9.9 Emergency call filter

Acc. to EN81-28, precautions must be taken to enable the emergency call system to filter out non-genuine emergency calls. For this purpose, the emergency-call filter must be capable of deleting an emergency call if one of the following events occur:

› The car is in the unlocking zone and car and shaft doors are completely open
› The car is moving and the doors open on the next stop on a floor

Adjustment options for FST-3 controllers

`Main menu / Config / Emergency-Call -`
› `No Filter`
› `Observe door status`
› `Ignore door status`

To ensure that the emergency call relays trigger, `No Filter` is set by NEW *LIFT* at the factory; there is one emergency call relay on the FST-3 and one on the FSM-2.

As stipulated in the standard, filtering can occur by setting the following parameters:

› `Observe door status:`
(End switch) emergency-call suppression occurs during the drive and while the car door(s) is/are open.
› `Ignore door status:`
Emergency-call suppression only occurs during the drive

9.10 Creating & loading a bacbcp

The FST-3 has a backup memory function. Stored in this memory is the configuration of all system parameters most recently stored following delivery from the factory. It is recommended that a configuration only be written to the controller bacbcp memory following successful commissioning.

The previously stored bacbcp is overwritten in this process.

If parameters are now changed (e.g. due to an application error) that cause a malfunction or other undesired effect, the "functioning parameters" can be restored by loading the bacbcp. The prerequisite for this is that a "functioning parameter set" be stored in the bacbcp.

Create bacbcp: `System / Config --> Bacbcp`

Load backup: `System / Config <--Backup`

On the information page (Shift+Enter) under `CfgBk: DD.MM.YY hh:mm`, you can find the exact time of the last bacbcp.

9.11 LON module configuration

It is sometimes necessary to reconfigure a LON module. Provided for this eventuality is an "emergency editor" for editing individual LON modules under `MAIN MENU/Config/LON Configuration/Show LON Modules`. To edit the bytes, it is first necessary to perform a release via parameter `LON-EDIT ENABLE=YES`.

For a detailed and transparent configuration of the LON modules, NEW *LIFT* recommends using the LON Module Center. With this universal LON module program, extensive adjustment options are available for all parameters of the modules. The current program is available on the NEW *LIFT* website http://www.newlift.de/en/service/download/pc-software/.

Requirements

The LON module editor can be used with the following modules:

› ADM xx
› EAZ xx
› SPK (speech computer I/F)

Note

Only modules that are in the FST LON module list can be edited. This list is created each time `SEARCH LON MODULES` is called from the LON CONFIGURATION menu.

Please note that all ADMs in the LON module list appear as ADR.

Expert knowledge is necessary for using the editor since no help functionality is provided and each of the individual bytes of the LON module configuration has a different function. The bacbcp function of the FST-3 does not support the changes to the bytes; in addition, bytes changes are accepted immediately without prior notice.

Please always contact NEW *LIFT* if you do not know exactly which change is necessary for your needs.

Procedure

› Enable Edit mode with `LON-EDIT ENABLE=YES`.
This value is not stored and is always reset to NO following an FST restart!
› Byte-wise navigation through the configuration data.
For a module that is not listed in the list mentioned above, the changed value is not stored (see *see Overview: LON module editing (example ADR-50XXX), page 121*).
› Save the value with E

Note

Before editing, please write down the old values so that they can be restored in case of doubt. Some of the changed configuration values do not take effect until after a cold start of the LON module. This applies, in particular, to the configuration of RIO-2 or SPK modules to another FST-ID number (e.g. FST-A / FST-B). Please note that, in this case, the LON module with the new FST-ID will no longer be visible in the LON module list.

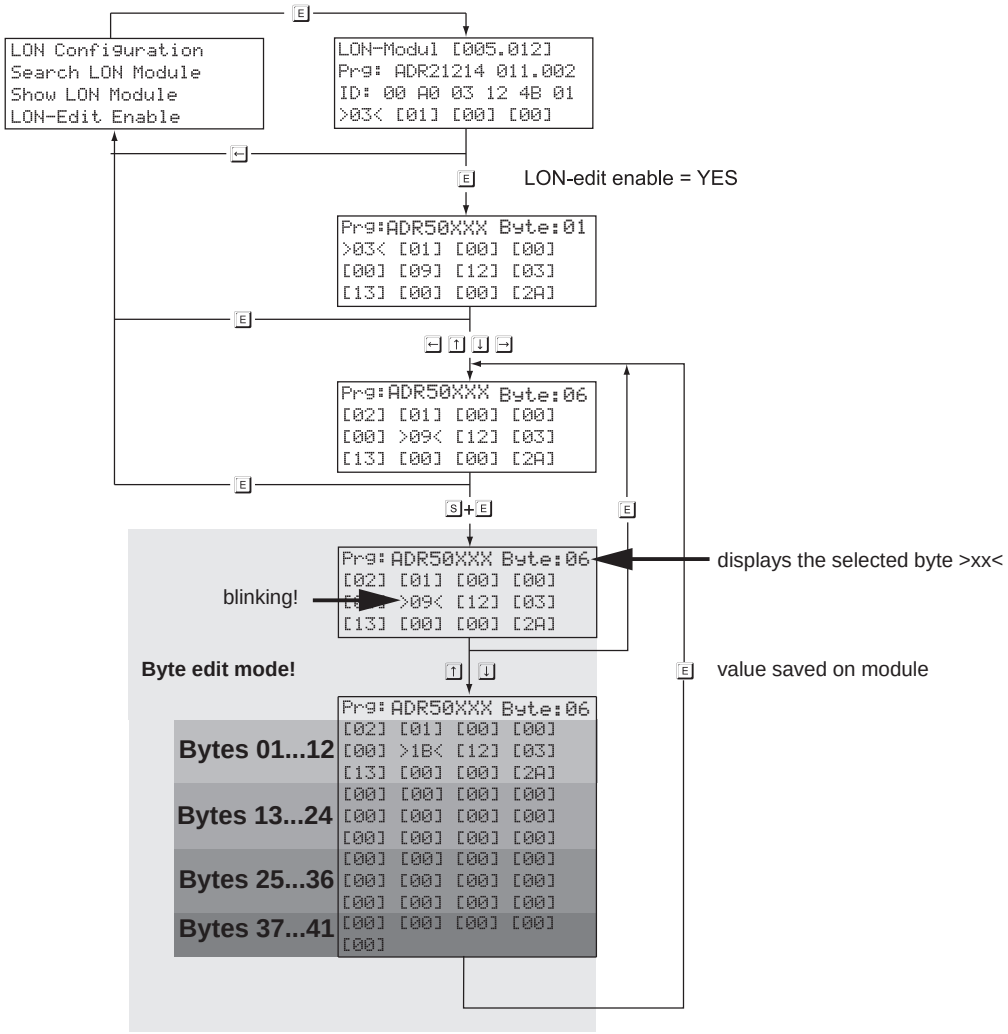

Overview: LON module editing (example ADR-50XXX)

Set values

The following lists show important set values in HEX format and their locations in the menu table. Bytes 13 to 24 are available beginning with version ADM-50. Currently, 24 of the 41 bytes are used. Please contact NEW *LIFT* if you require detailed information.

Byte addresses Prg: ADR50XXX EDITOR

[byte-01] [byte-02] [byte-03] [byte-04]

[byte-05] [byte-06] [byte-07] [byte-08]

[byte-09] [byte-10] [byte-11] [byte-12] **bytes 01-24 for ADM-50**

[byte-13] [byte-14] [byte-15] [byte-16]

[byte-17] [byte-18] [byte-19] [byte-20]

[byte-21] [byte-22] [byte-23] [byte-24]

[byte-25] [byte-26] [byte-27] [byte-28]

[byte-29] [byte-30] [byte-31] [byte-32]

[byte-33] [byte-34] [byte-35] [byte-36] **bytes 25-41 currently have no function**

[byte-37] [byte-38] [byte-39] [byte-40]

[byte-41]

Set values ADR20, ADR20B, ADR20E

Byte	Uses	Set values	Comment
01	Floor	00-3F (0-63 decimal)	
02	Door	A=0, B=1, C=2	ADM must be restarted
03	Bus no.	0-7	ADM must be restarted
04	FST-Host ID	0RRR0LLL RRR="Right" FST, A=0, B=1 etc. LLL="Left" FST A=0, B=1 etc.	ADM must be restarted
05	Special	FST selection for ADM-20E A=0, B=1 etc.	
06	Config. bits	Bit 0=configured Bit 1=selectivity 1=ADM only for left FST Bit 2=arrow mode lock 0=FST menu 1= "Arrow" Bit 3=arrow 0=direction 1=continue Bit 4,5=reserved Bit 6=occupied indicator Bit 7=disabled option	› Must be set! › Normally '0'
07	Input pin 12	Bit 0-3=input function no. Bit 4=AutoRepeat Mode Bit 5-7 reserved	In event of fire recall, set remote off 1.
08	Input pin 13	Bit 0-3=input function no. Bit 4=AutoRepeat Mode Bit 5-7 reserved	In event of fire recall, set remote off 1.
09	Output pin 7,14	Bit 0-3=output function no. pin-14 Bit 4-7=output function no. pin-7	
10	Addit. info	Input-function-dependent information	
11	Addit. info	Input-function-dependent information	
12	Not used		

Pins 12 and 13 input function	Value (hex)	AutoRepeat	Comment
Fire recall	2	Yes	
Landing priority	3	No (standard)	
Remote shutdown	4	Yes	
Fire-recall selective	5	Yes	
Remote shutdown selective	6	Yes	Pin 12 function: byte 07 bit 5=FST select. 0=left FST; 1=right FST Pin 13 function: byte 08 bit 5= 0=left FST; 1=right FST
Smoke detector	7	Yes	
Landing priority selective	9	No (standard)	Byte 11 = FST mask, HGFEDCBA
Special function	A	No	Byte 11 = function number
Fire recall reset (SIA)	B	No	
Landing priority super	C	No (standard)	
Landing priority super selective	D	No (standard)	Byte 11 = FST mask, HGFEDCBA

Set values ADR21, ADR22 (penthouse), ADR23 (bank)

Byte	Uses	Set values	Comment
01	Floor	00-3F (0-63 decimal)	
02	Door	A=0, B=1, C=2	ADM must be restarted
03	Bus no.	0-7	ADM must be restarted
04	FST-Host ID	00000LLL LLL="Left" FST A=0, B=1 etc.	ADM must be restarted
05	Reserved		
06	Config. bits	Bit 0=configured Bit 1=selectivity 1=ADM only for left FST Bit 2=arrow mode lock 0=FST-menu 1= "Arrow" Bit 3=arrow 0=direction 1=continue Bit 4,5=EAZ Mode 0=hex 1=gray 2=1-of-N Bit 6=occupied indicator Bit 7=disabled option	› Must be set! › Normally '0'
07	Input pin 12	Bit 0-3=input function no. Bit 4=AutoRepeat mode Bit 5-7 reserved	In event of fire recall, set remote off 1.
08	Input pin 13	Bit 0-3=input function no. Bit 4=AutoRepeat mode Bit 5-7 reserved	In event of fire recall, set remote off 1.
09	Output pin 7,14	bit 0-3=output function no. pin 14 Bit 4-7=output function no. pin 7	
10	Addit. info	Input-function-dependent information (pin 12)	
11	Addit. info	Input-function-dependent information (pin 13)	
12	Not used		

Pins 12 and 13 input function	Value (hex)	AutoRepeat	Comment
Fire recall	2	Yes	
Landing priority	3	No (standard)	
Remote shutdown	4	Yes	
Fire-recall selective	5	Yes	
Remote shutdown selective	6	Yes	
Smoke detector	7	Yes	
Landing priority selective	9	No (standard)	Byte 11 = FST mask, HGFEDCBA
Special function	A	No	Byte 11 = function number
Fire recall reset (SIA)	B	No	
Landing priority super	C	No (standard)	

Set values ADR30 / 31 (EAZ-256.40/64)

Byte	Uses	Set values	Comment
01	Floor	00-3F (0-63 decimal)	
02	Door	A=0, B=1, C=2	ADM must be cold started afterward
03	Bus no.	0-7	ADM must be cold started afterward

Byte	Uses	Set values	Comment
04	FST-Host ID	00000LLL LLL="Left" FST A=0, B=1 etc.	ADM must be restarted
05	Reserved		
06	Config. bits	Bit 0=configured Bit 1=selectivity 1=ADM only for left FST Bit 2=arrow mode lock 0=FST menu 1= "arrow" Bit 3=arrow 0=direction 1=continue Bit 4,5=reserved Bit 6=reserved Bit 7=reserved	› Must be set! › Normally '0'
07	Input pin 8	Bit 0-3=input function no. Bit 4=AutoRepeat mode Bit 5-7 reserved	In event of fire recall, set remote off 1.
08	Input pin 9	Bit 0-3=input function no. Bit 4=AutoRe-peat mode Bit 5-7 reserved	In event of fire recall, set remote off 1.
09	Reserved		
10	Addit. info	Input-function-dependent information (pin 8)	
11	Reserved		
12	Not used		

Pins 8 and 9 input function	Value (hex)	AutoRepeat	Comment
Fire recall	2	Yes	
Landing priority	3	No (standard)	
Remote shutdown	4	Yes	
Fire-recall selective	5	Yes	
Remote shutdown selective	6	Yes	
Smoke detector	7	Yes	
Landing priority selective	9	No (standard)	Please enquire with NEW *LIFT*
Special function	A	No	Please enquire with NEW *LIFT*
Fire recall reset (SIA)	B	No	
Landing priority super	C	No (standard)	Please enquire with NEW *LIFT*

Set values ADR32 / 33 (EAZ-256.40/64)

Byte	Uses	Set values	Comment
01	Floor	00-3F (0-63 decimal)	
02	Door	A=0, B=1, C=2	ADM must be cold started afterward
03	Bus no.	0-7	ADM must be cold started afterward
04	FST-Host ID	00000LLL LLL="Left" FST A=0, B=1 etc.	ADM must be restarted
05	Reserved		

Byte	Uses	Set values	Comment
06	Config. bits	Bit 0=configured Bit 1=selectivity 1=ADM only for left FST Bit 2=arrow mode lock 0=FST menu 1= "arrow" Bit 3=arrow 0=direction 1=continue Bit 4,5=reserved Bit 6=reserved Bit 7=reserved	› Must be set! › Normally '0'
07	Input pin 8	Bit 0-3=input function no. Bit 4=AutoRepeat mode Bit 5-7 reserved	In event of fire recall, set remote off 1.
08	Input pin 9	Bit 0-3=input function no. Bit 4=AutoRe-peat mode Bit 5-7 reserved	In event of fire recall, set remote off 1.
09	Reserved		
10	Addit. info	Input-function-dependent information (pin 8)	
11	Reserved		
12	Not used		

Pins 8 and 9 input function	Value (hex)	AutoRepeat	Comment
Fire recall	2	Yes	
Landing priority	3	No (standard)	
Remote shutdown	4	Yes	
Fire-recall selective	5	Yes	
Remote shutdown selective	6	Yes	
Smoke detector	7	Yes	
Landing priority selective	9	No (standard)	Please enquire with NEW *LIFT*
Special function	A	No	Please enquire with NEW *LIFT*
Fire recall reset (SIA)	B	No	
Landing priority super	C	No (standard)	Please enquire with NEW *LIFT*

RIO-2 settings

Byte	RIO-2 as I/O module	RIO-2 as ASV module (pawl-control module)
3	08	00
4	10	10
5	01	01

Set values SPK (Prg=SPK000xx)

Byte	Uses	Set values	Comment
1	FST-Host ID	FST A=0, B=1 etc.	ADM must be restarted

Set values ADR-50 (includes the functions of the ADR20, 20E, 21, 22, and 23)

Byte	Uses	Set values	Comment
01	Floor	00-3F (0-63 decimal)	
02	Door	A=0, B=1, C=2	ADM must be restarted
03	Bus no.	0-7	ADM must be restarted
04	FST-Host ID	FST A...H = 00...07	ADM must be restarted
04	FST-Host ID	"Right, double" FST A...H = 0X...7X X = variable if the "left" FST host changes in "double" mode: A...H = X0...X7	ADM must be restarted
05	Reserved		
06	Config. bits	Bit 0=configured Bit 1=selectivity 1=ADM only for left FST Bit 2=arrow mode lock 0=FST-menu 1= "Arrow" Bit 3=arrow 0=direction 1=continue Bit 4,5=EAZ Mode 0=hex 1=gray 2=1-of-N Bit 6=occupied indicator Bit 7=disabled option	› Must be set! › Normally '0'
07	Input pin 12	Bit 0-3=input function no. Bit 4=AutoRepeat mode Bit 5-7 reserved	In event of fire recall, set remote off 1.
08	Input pin 13	Bit 0-3=input function no. Bit 4=AutoRepeat mode Bit 5-7 reserved	In event of fire recall, set remote off 1.
09	Output pin 7,14	bit 0-3=output function no. pin 14 Bit 4-7=output function no. pin 7	
10	Addit. info	Input-function-dependent information (pin 12)	
11	Addit. info	Input-function-dependent information (pin 13)	
12	Addit. info	For other configurations, see LON Module Center	

Pins 12 and 13 input function	Value (hex)	AutoRepeat	Comment
Fire recall	2	Yes	
Landing priority	3	No (standard)	
Remote shutdown	4	Yes	
Fire-recall selective	5	Yes	
Remote shutdown selective	6	Yes	
Smoke detector	7	Yes	
Landing priority selective	9	No (standard)	Byte 11 = FST mask, HGFEDCBA
Special function	A	No	Byte 11 = function number
Fire recall reset (SIA)	B	No	
Landing priority super	C	No (standard)	

10 Technical data

10.1 FST-3 control module

10.1.1 General

Description	Value
Supply voltage	24 V DC ±10%
Typical power consumption	300 mA
24VDC / GND open collector outputs	Short circuit-proof
Length x width x depth	250 x 106 x 66.9 mm 271 x 106 x 72.9 mm (with screw lugs)
Temperature range: Storage & transport / operation	-20 – +70 °C / ±0 – +65 °C
Relative humidity: Storage & transport / operation (non-condensing)	+0 – +100 % / +0 – +95 %
Protection type	IP30
Length x width x depth	250x106x66.9mm
Length x width x depth	Length x width x depth

The jumper, terminal and socket settings listed here are default values and apply only if no deviations are specified in the wiring diagram.

All settings marked with ✶ are the settings set on delivery.

10.1.2 Dimensions

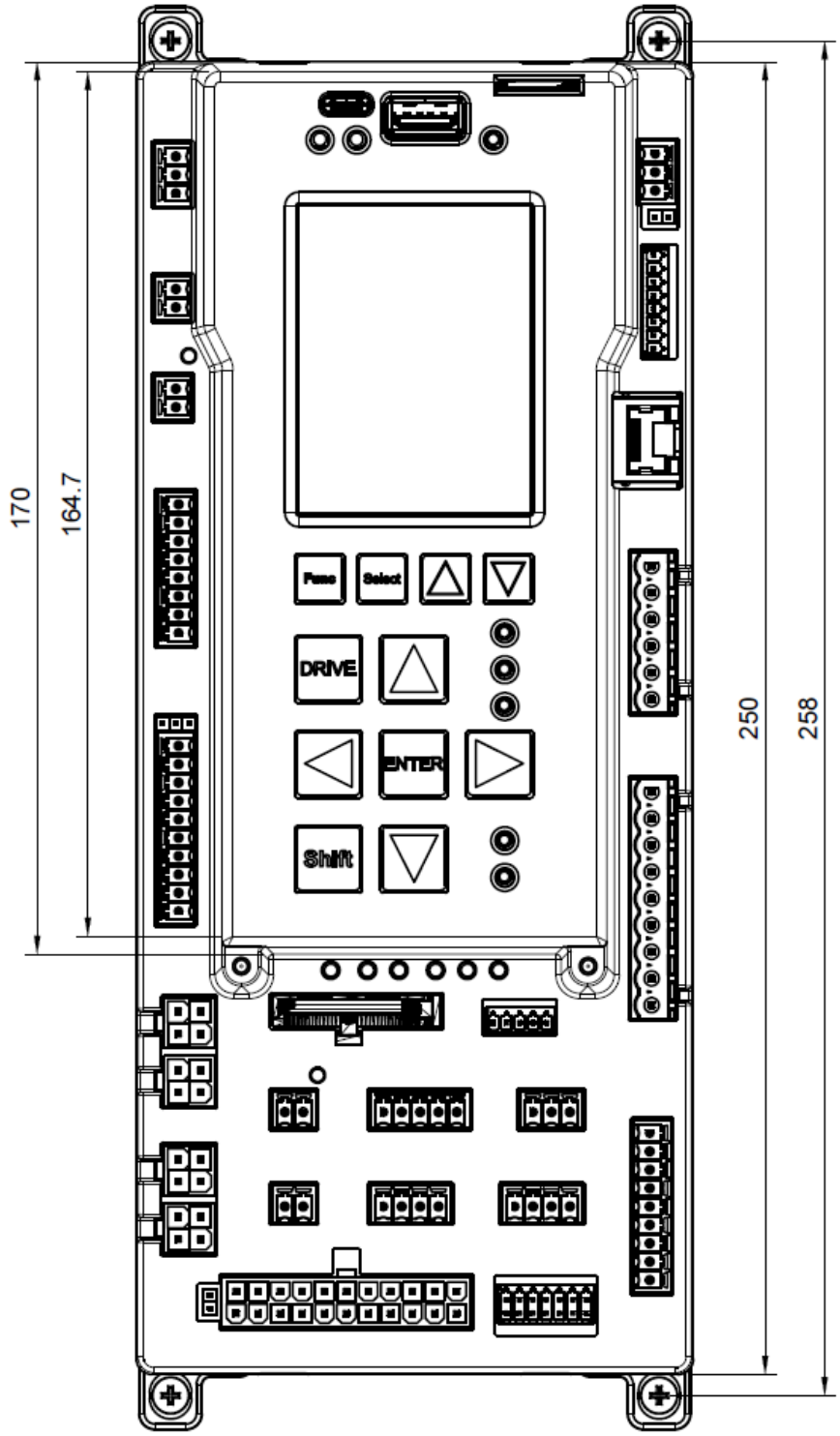

FST-3 front view

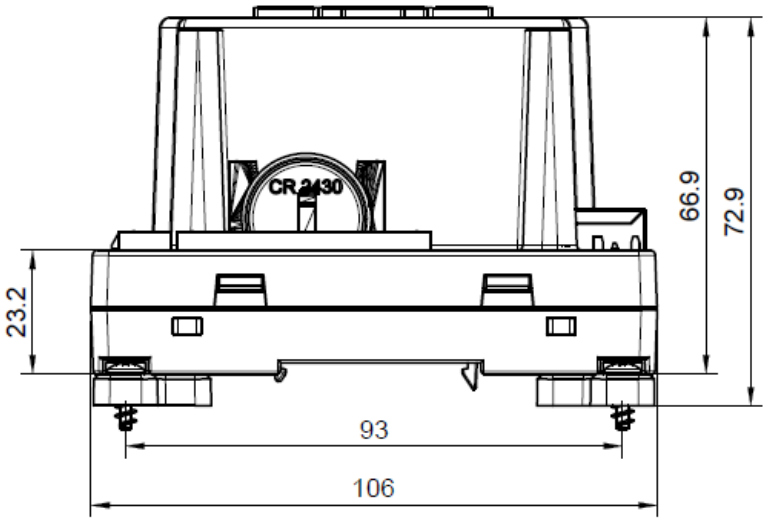

FST-3 bottom view

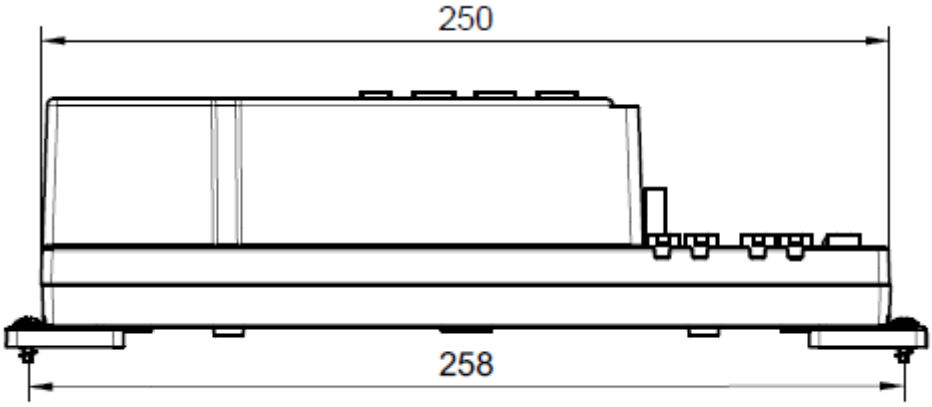

FST-3 side view

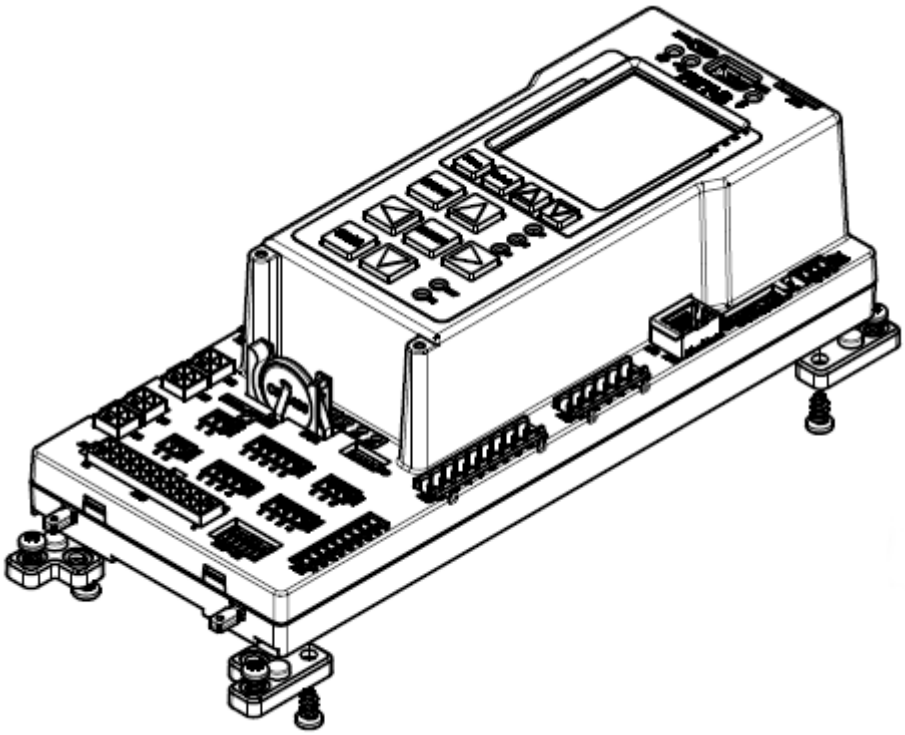

Possible installation view – screwed

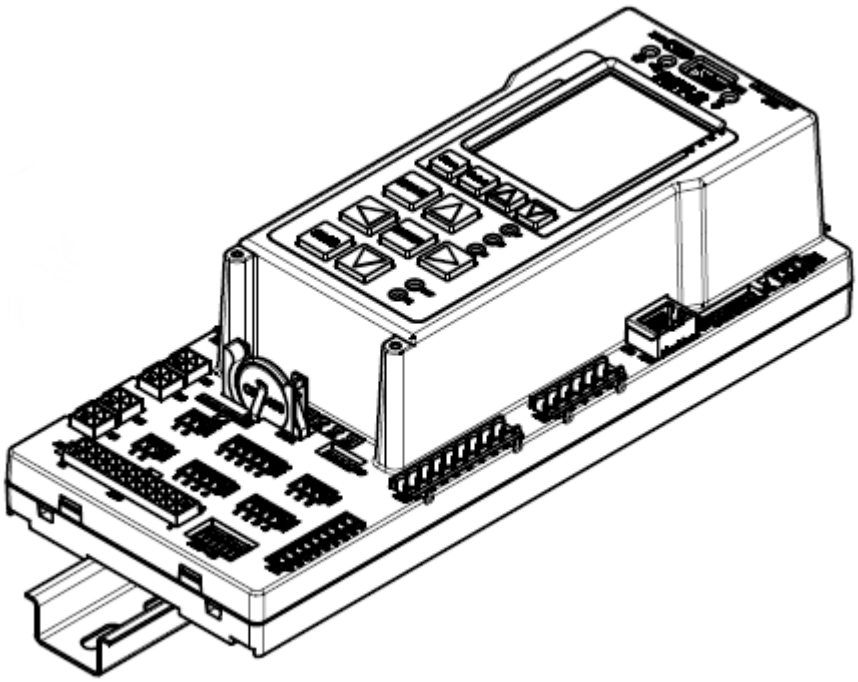

Possible installation view – on rail

10.1.3 FST-3 jumpers

Jumper J1: Pull up/down for load measurement inputs for overload and full load

Function	J1
Switched +24 V for load measurement inputs	1-2 (left)
Switched GND for load measurement inputs	2-3 (right) ✶

The potential selection applies to the inputs on terminal strip X1D.4 and .5.

Jumper J2: CAN BUS termination for X30

Function	J2
Terminator inactive	Open✶
Terminator active	Plugged

This jumper is in the open position on delivery. Plug in only after consultation with NEWLIFT or if shown in the system circuit diagrams.

10.1.4 Microfuses

Component	Fuse
FSM-2	SMD NANO2 ; 750mA / SF
ADM	SMD NANO2 ; 250mA / T
EAZ-256	SMD NANO2 ; 250mA / T
RIO-2	SMD NANO2 ; 375mA / T
TFT110/210	SMD NANO2 ; 500mA / T
SAM	SMD NANO2 ; 500mA / T
TFT.45	SMD NANO2 ; 375mA / T

10.1.5 FST-3 terminal strips and sockets

The terminal strips are listed in numerical order.

FST: X1A	Power supply
1	+24 V / 2 A (supply voltage of FST)
2	GND
3	PE

FST: X1B	Power supply
1	+24 V / 2A power supply from auxiliary power source (HSG)
2	GND

FST: X1C	I/O ports
1	Programmable I/O port 00
2	Programmable I/O port 01
3	Programmable I/O port 02

FST: X1C	I/O ports
4	Programmable I/O port 03
5	Programmable I/O port 04
6	Programmable I/O port 05
7	Programmable I/O port 06
8	Programmable I/O port 07

FST: X1D	Monitoring
1	Car lighting (car light) OFF
2	Landing control OFF
3	Machine room temperature
4	Overload
5	Full load
6	Brake monitoring A
7	Brake monitoring B
8	Drive monitoring (fault alarm input)
9	Motor monitoring (temperature)
10	Contactor monitoring

FST: X2	Hand-held terminal
Pin 1	Bus signal A
Pin 2	Bus signal B
Pin 3	+24 V
Pin 4	GND

The optional LBG is connected to socket X2.

FST: X3	Option bus
Pin 1	Bus signal A
Pin 2	Bus signal B
Pin 3	+24 V
Pin 4	GND

X3 is an option bus socket for special applications (e.g., RIO module).

FST: X4	Power supply of shaft bus (not for groups)
Pin1	+24 V
Pin 2	GND

The power supply for the shaft bus is fed in via X4.

FST: X5, X6	X5: Shaft bus A X6: Shaft bus B
Pin 1	Bus signal A
Pin 2	Bus signal B
Pin 3	+24 V
Pin 4	GND

Shaft bus side A is connected to X5, shaft bus side B is connected to socket X6.

FST: X9	X9: Service PC / protocol adapter / modem (RS-232 interface)
1	TX
2	RTS
3	RX
4	CTS
5	GND

FST: X11	DCP for regulator activation
1	Not assigned
2	Not assigned
3	485 A
4	485 B neg.
5	485 A
6	485 B neg.
7	GND
8	PE

FST: X16A	Intercom
1	Intercom A or A / X30(5)
2	Intercom A or B / X30 (17)
3	Intercom A or C / X30 (6)
4	Intercom A or D / X30 (18)

FST: X16B	Free travelling cable wires
1	X30 (3)
2	X30 (15)
3	X30 (7)
4	X30 (19)

FST: X17A	Telephone (exchange)
1	Exchange A
2	Exchange B

FST: X17B	Shaft pit emergency call button
1	Emergency call circuit +
2	Emergency call circuit -

FST: X17C	Shaft pit emergency call button
1	K13B NO contact
2	K13B contact (COM)
3	K13B NC contact
4	K13C contact (COM)
5	K13C NC contact

FST: X18	K17 collective error message
1	K17B contact (COM)
2	K17B NC contact
3	K17B NO contact

FST: X20	Pre-selection relay K0 to K2
1	K0 contact (COM)
2	K0 NO contact
3	K0 NC contact
4	K1 contact (COM)
5	K1 NO contact
6	K1 NC contact
7	K2 contact (COM)
8	K2 NO contact
9	K2 NC contact

FST: X21	Actuation of external pre-selection (parallel)
1	+24V
2	VSTK-3
3	VSTK-4
4	VSTK-5
5	VSTK-6
6	VSTK-7
7	VSTK-8
8	VSTK-9
9	VSTK-10

FST: X23	Speed limiter - remote triggering and resetting; activation via Test menu of the FST
1	Triggering of relay K15 contact (COM)
2	Triggering of relay K15 contact (NO)
3	Triggering of relay K15 contact (NC)
4	Resetting of relay K16 contact (COM)
5	Resetting of relay K16 contact (NO)
6	Resetting of relay K16 contact (NC)

FST: X26	Slot for microSD card (data logging)
	microSD card

FST: X30 FSM-2: X30	Travelling cable
1	+24 V
2	LON bus car A
3 twisted with pin 15	Twisted with pin 15; assignment options: › HSG+ voltage via F50 only for LIMAX3R/S2
4	› LIMAX3R DATA B-
5 twisted with pin 17	Assignment options: › Speak 1(A) › Not assigned

FST: X30 FSM-2: X30	Travelling cable
6 twisted with pin 18	Assignment options: › Speak 3(C) › Not assigned
7	Car inspection down
8	Telephone A
9	CAN-L
10	Emergency power +
11	GND
12	GND
13	Emergency call
14	LON bus car B
15 twisted with pin 3	› Car inspection ON
16	› LIMAX3R Data A+
17 twisted with pin 5	› Speak 2 (B)
18 twisted with pin 6	› Speak 4 (D)
19	Car inspection up
20	Telephone B
21	CAN - H
22	+ 24 V

FST: X40	Network - Ethernet LAN 10/100MBit

FST: X41	X41: Host, USB port for USB 2.0 memory media

FST: X42	USB C

FST: X43	(Private CAN)
1	CAN L
2	GND
3	CAN H

10.2 S2 safety module

10.2.1 General

Description	Value
Supply voltage	24 V DC ±10%
Typical power consumption	300 mA
Safety circuit voltage	230VAC /50Hz ±10%
Safety circuit fuse	2A – characteristic B
24VDC / GND open collector outputs	Short circuit-proof
Length x width x depth	250 x 106 x 66.9 mm 271 x 106 x 72.9 mm (with screw lugs)
Temperature range: Storage & transport / operation	-20 – +70 °C / ±0 – +65 °C
Relative humidity: Storage & transport / operation (non-condensing)	+0 – +100 % / +0 – +95 %
Protection type	IP00
Length x width x depth	250x106x66.9mm
Length x width x depth	Length x width x depth

The jumper, terminal and socket settings listed here are default values and apply only if no deviations are specified in the wiring diagram.

All settings marked with ✶ are the settings set on delivery.

10.2.2 Dimensions

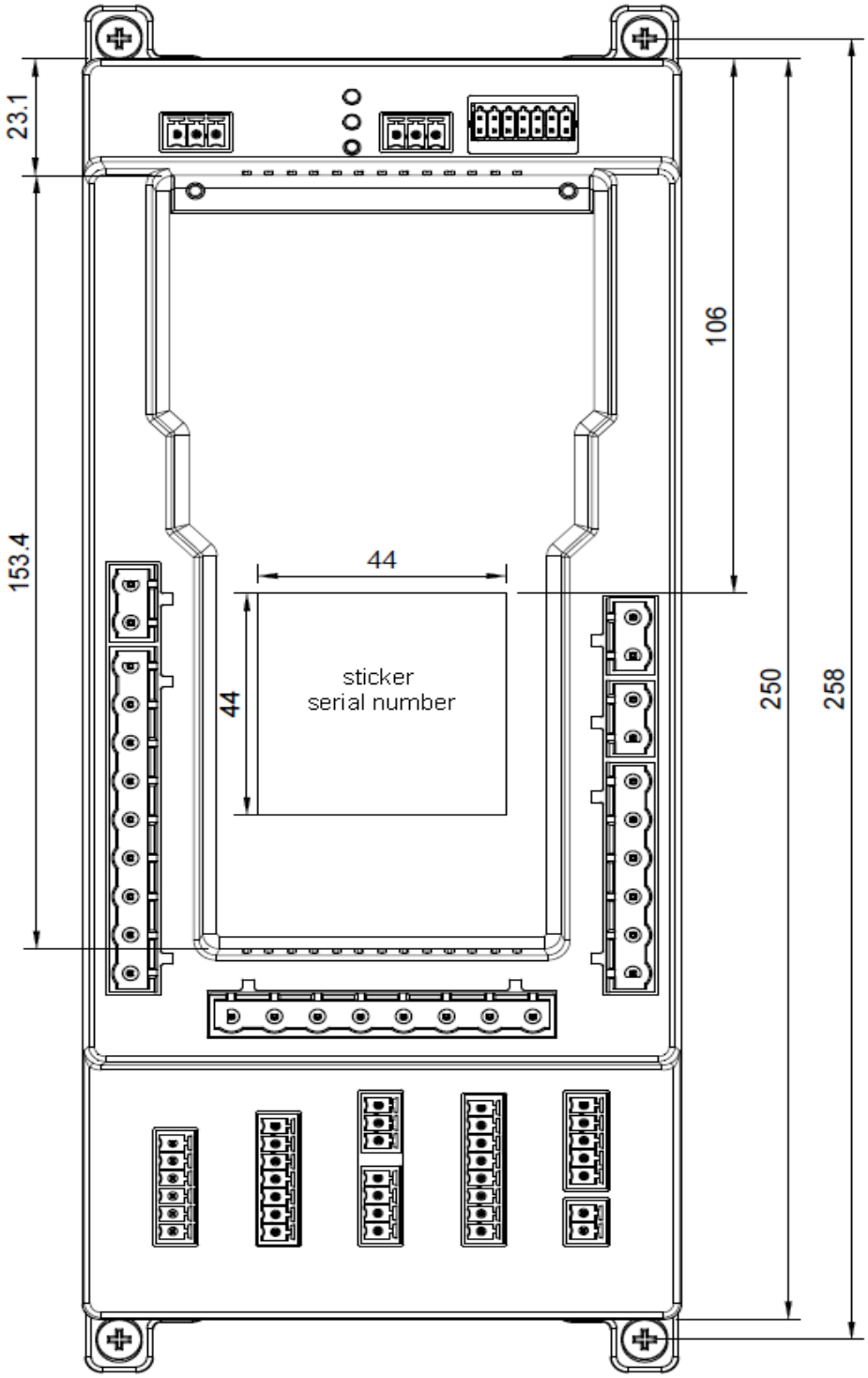

S2 front view

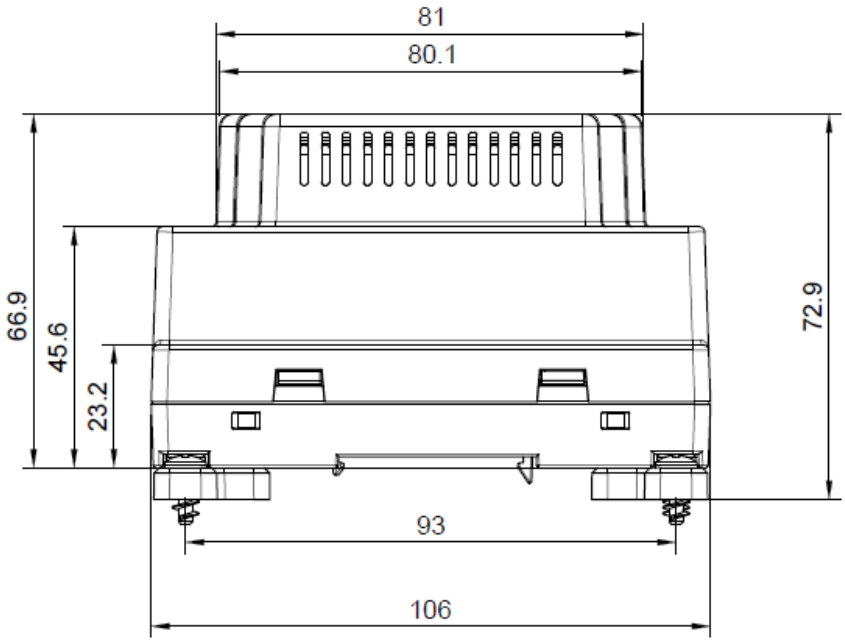

S2 bottom view

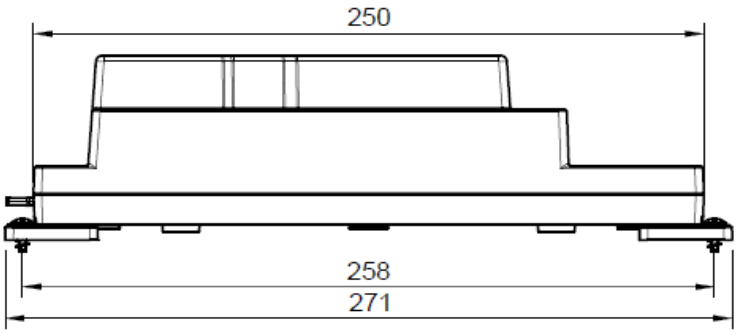

S2 side view

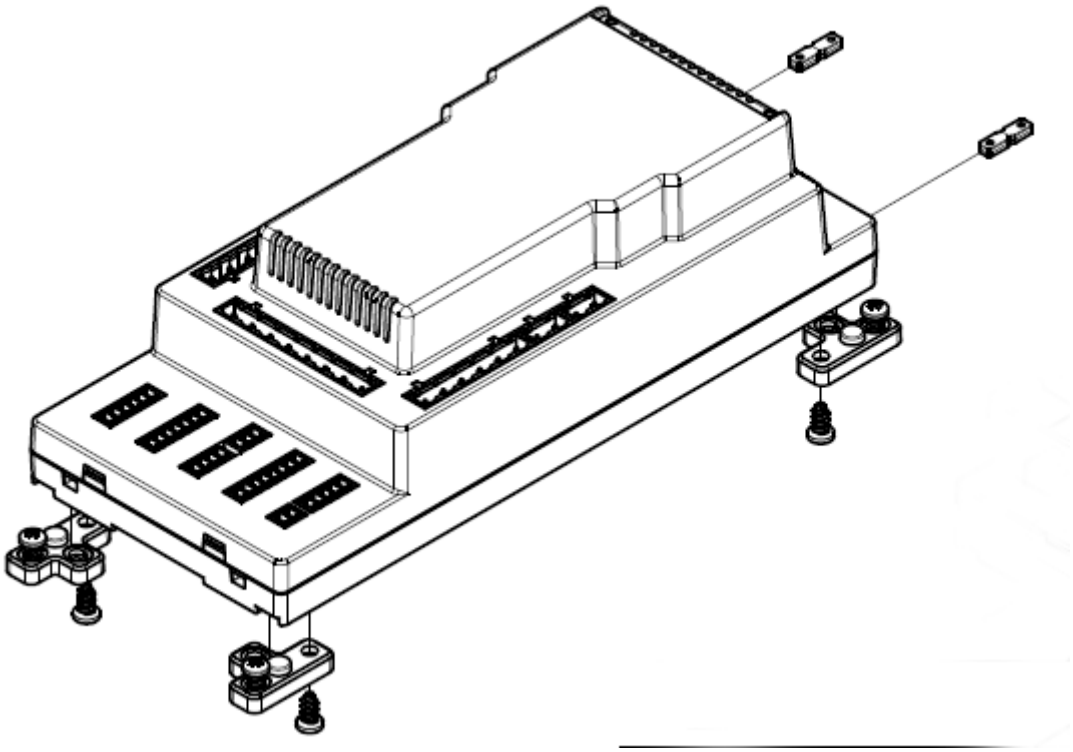

Possible installation view – screwed

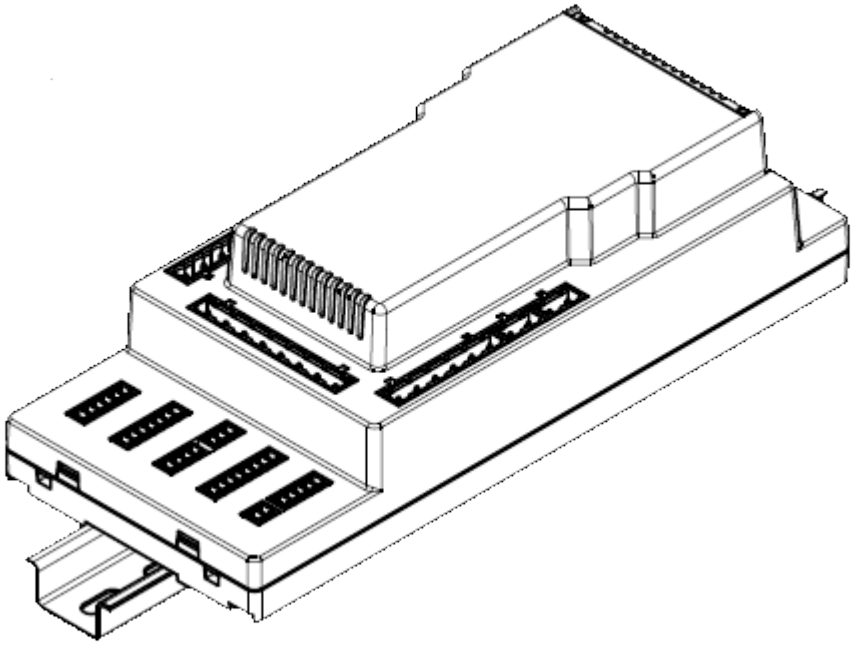

Possible installation view – on rail

10.2.3 S2 terminal strips and sockets

FST: X1	Power supply
1	+24 V /
2	GND
3	PE

S2: X10	CAN connection to FST-3
1	n.a.
2	n.a.
3	n.a.
4	n.a.
5	n.a.
6	n.a.
7	n.a.
8	RS 485 A
9	RS 485 B
10	GND
11	n.a.
12	n.a.
13	CAN2 H CON
14	CAN2 L CON

S2: X10		Top view of plug				
2	4	6	8	10	12	14
1	3	5	7	9	11	13

S2: X14	Safety circuit query
1	Car emergency stop closed (FKNH)
2	Shaft emergency stop closed (NH)
3	Car door contact of door side C closed (TC) – alternatively, can be used as emergency end switch or manual door contact
4	Car door contact of door side B closed (TB)
5	Car door contact of door side A closed (TA)
6	Door lock or bolt contact of door side A closed (SPA)
7	Door lock or bolt contact of door side B closed (SPB)
8	Safety circuit closed (CCT CLOSED)

S2: X15	Safety circuit start, bypass
1	Safety circuit misc.
2	Bypass end
3	Reserve wire 1 --> X32(5)
4	Reserve wire 2 --> X32(4)
5	Safety circuit start -->X32(3)
6	Neutral wire start

S2: X16	Car inspection
1	Car inspection on
2	Car inspection up
3	Car inspection down

S2: X16	Car inspection
4	Car inspection fast

S2: X18	Auxilary, Reset access monitoring
1	Reset input for access monitoring of shaft pit (SG)
2	Reset input for access monitoring of car roof and shaft head (FK)
3	Auxiliary control DOWN
4	Auxiliary control UP
5	Auxiliary control ON

S2: X22	Safety circuit output
1	Neutral wire output
2	End of safety circuit output

S2: X25	Evacuation
1	Evacuation 2
2	Evacuation 1

S2: X26	Safety brake / anti creep device
1	SBR relay contact (NO) input
2	SBR relay contact (NO) output

S2: X32	Travelling cable
1	Car door contact A
2	Car door contact B
3	Car door contact C
4	Car emergency stop
5	Reserve wire 1 -->X15(4)
6	Reserve wire 2 -->X15(3)
7	Request safety circuit -->X15(2)
8	Door bypass safety circuit (start)
9	Neutral wire to car (stub line)

S2: X45	Position-dependent outputs
1	Position 1 output A
2	Position 1 output B
3	Position 2 output A
4	Position 2 output B
5	Feedback input for position A
6	Feedback input for position B

S2: X46	Door zone
1	Output for door zone display
2	Power supply for door zone display (24VDC)

S2: X47	Safety inputs 24VDC (shaft)
1	Access monitoring of car (FK) and shaft head

S2: X47	Safety inputs 24VDC (shaft)
2	Access monitoring of shaft pit (SG)
3	Folding supports for protected space for shaft pit inspection drive
4	Folding supports for protected space for shaft pit normal drive
5	Shaft pit inspection fast
6	Shaft pit inspection down
7	Shaft pit inspection up
8	Shaft pit inspection ON

S2: X48	Safety inputs 24VDC
1	Folding supports for protected space for car normal drive
2	Folding supports for protected space for car inspection drive
3	Input for tape switch
4	Feedback input for safety brake or anti creep device
5	Suppression of SG / FK after S2 reset (reset lock)
6	Input for bypass function
7	UPS ON

S2: X49	Reset, installation mode and teach mode
1	Input for S2 fault reset
2	Input for installation mode activation
3	Input for teach mode activation

S2: X50	CAN BUS
1	CAN L
2	GND
3	CAN H

10.3 FSM-2 car top control module

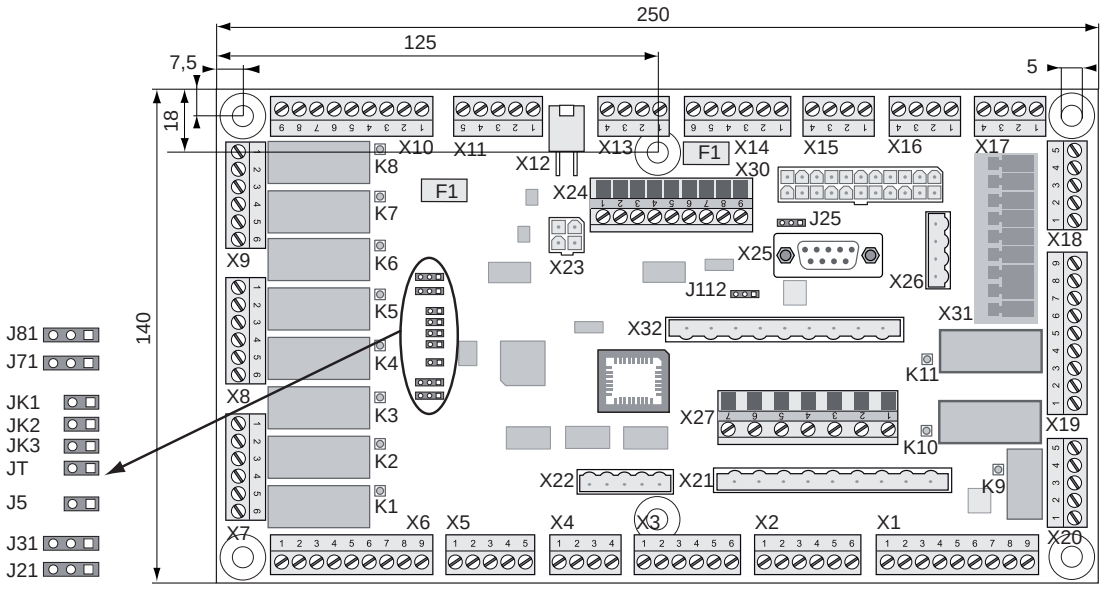

FSM-2

10.3.1 FSM-2 jumpers

The service jumper J5 is not plugged in.

Car door assignment	JT
Door A or door A & B	open
Door C	plugged

FST / car assignment	Operating mode	JK1	JK2	JK3
FST A	single or group mode	open	open	open
FST B	group mode	plugged	open	open
FST C	group mode	open	plugged	open
FST D	group mode	plugged	plugged	open
FST E	group mode	open	open	plugged
FST F	group mode	plugged	open	plugged
FST G	group mode	open	plugged	plugged
FST H	group mode	plugged	plugged	plugged

Car assignments of the FSM-2 car top control module and the FPM-1 / FPM-2 car operating panel module must be identical.

Door end switch CLOSED	J21: Door A	J71: Door B
Door CLOSED end switch must be present, compulsorily switches the door CLOSED relay K2 (door A) or K7 (door B) off	1-2	1-2
Door CLOSED end switch can be present, does not act directly on the door CLOSED relay K2 (door A) or K7 (door B)	2-3	2-3

Door end switch OFF	J31: Door A	J81: Door B
Door CLOSED end switch must be present, compulsorily switches the door CLOSED relay K3 (door A) or K8 (door B) off	1-2	1-2
Door CLOSED end switch can be present, does not act directly on the door CLOSED relay K3 (door A) or K8 (door B)	2-3	2-3

Shielding encoder cable X25	J25
Shielding rotary encoder cable on GND	1-2
Shielding rotary encoder cable on PE	2-3

Car lighting monitor	J112
Internal voltage monitoring	1-2
External light sensor (X11)	2-3

10.3.2 FSM-2 terminal strips and sockets

Bus connections

X12: LON bus car

X23: HHT hand-held terminal, remains constantly open and is not equipped with a terminator!

FSM-2 X1	Safety circuit without bypass 230 V
1	Switch 1
2	PE
3	Switch 1
4	Switch 2

FSM-2 X1	Safety circuit without bypass 230 V
5	PE
6	Switch 2
7	Switch 3
8	PE
9	Switch 3

FSM-2 X2	Safety circuit with bypass 230 V
1	Arrest switch
2	PE
3	Arrest switch
4	Switch 4
5	PE
6	Switch 4

FSM-2 X3	Safety circuit door contacts 230 V
1	Door contact of car door A
2	PE
3	Door contact of car door A
4	Door contact of car door B
5	PE
6	Door contact of car door B

FSM-2 X4	Outputs approach chime
1	+24 V
2	Approach chime UP
3	Approach chime DOWN
4	GND

FSM-2 X5	Inputs load measurement device
1	+24 V
2	Input empty load
3	Input full load
4	Input over load
5	GND

FSM-2 X6 FSM-2 X10	Inputs car door A Inputs car door A
1	+24 V
2	End switch door open
3	+24 V
4	End switch door closed
5	+24 V
6	Reversing contact door
7	+24 V
8	Light barrier door
9	GND

FSM-2 X7 FSM-2 X9	Outputs car door A Outputs car door B
1	Relay K2, K3 common door signals
2	Relay K3 door signal open door
3	Relay K2 door signal close door
4	Relay K1 for push function / light curtain test NO
5	Relay K1 for push function / light curtain test NC
6	Relay K1 for push function / light curtain test COM

FSM-2 X8	Lock magnets
1	Relay K5 curve door side A NC
2	Relay K5 curve door side A COM
3	Relay K5 curve door side A NO
4	Relay K4 curve door side B NC
5	Relay K4 curve door side B COM
6	Relay K4 curve door side B NO

FSM-2 X11	Car lighting sensor
1	+24 V
2	External sensor
3	+ HSG
4	+8 V (max. 50mA)
5	GND

FSM-2 X13	Emergency call button / Emergency lighting
1	Emergency lighting +
2	Emergency lighting -
3	Emergency call button car NC
4	Emergency call button car COM

FSM-2 X14	Car inspection control / power supply
1	+24 V resp. +HSG +12 V
2	Inspection UP
3	GND
4	+24 V
5	Inspection DOWN
6	GND

FSM-2 X15	Car inspection control
1	LIMAX3R DATA+
2	LIMAX3R DATA-
3	Power supply for car inspection control
4	Car inspection control ON

FSM-2: X16	Inspection control – car SK folding supports / reserve wires
1	SK folding supports, normal drive
2	Speak 3 (C)
3	Speak 2 (B)
4	Inspection fast

FSM-2: X17	Telephone / CAN
1	CAN - H
2	CAN L
3	Exchange line B
4	Exchange line A

FSM-2: X18	AC door 400V AC
1	PE
2	L3
3	L2
4	L1
5	N

FSM-2: X19	Car lighting / ventilator
1	Relay K10 car lighting
2	PE
3	N car lighting
4	Relay K11 car ventilator
5	PE
6	N car lighting
7	L car lighting
8	PE
9	N car lighting

FSM-2: X20	Emergency call
1	Emergency call button under car
2	Emergency call button under car
3	Relay K9 emergency call forwarding COM
4	Relay K9 emergency call forwarding NC
5	Relay K9 emergency call forwarding NO

FSM-2: X21	Reserve and safety circuit
1	Reserve for terminal X27:2
2	Reserve for terminal 27:4
3	Reserve for terminal 27:6
4	Reserve for travelling cable X32:8
5	To safety circuit of switches 1 - 3
6	To safety circuit of switches 1 - 3

FSM-2: X21	Reserve and safety circuit
7	N socket control pod
8	PE
9	L socket control pod

FSM-2: X22	Reserved for conventional controller (not S2/S2)
1	Reserved
2	Reserved
3	Reserved
4	Reserved
5	Reserved

FSM-2: X24	Spare inputs and outputs
1	GND
2	Programmable I/O port72
3	Programmable I/O port73
4	Programmable I/O port74
5	Programmable I/O port75
6	Programmable I/O port76
7	Programmable I/O port77
8	Programmable I/O port78
9	+24 V

FSM-2: X25	Shaft positioning system (only LIMAX3(3)R)
1	GND
2	DATA+
3	GND
4	+24V via F50 only for S2
5	GND
6	+24 V
7	DATA +
8	Must remain unused ! --> X15:4 inspection ON
9	+5 V

FSM-2: X26	Car top box
1	Emergency call button
2	Emergency call button
3	L shaft light button
4	L shaft light

FSM-2: X27	Reserve
1	Reserve 2 for travelling cable X32.5
2	Reserve for terminal 21.1

FSM-2: X27	Reserve
3	Reserve 1 for travelling cable X32:6
4	Reserve for terminal 21:2
5	Reserve for terminal X27:6
6	Reserve for terminal X27:5
7	N safety circuit

FSM-2 X30: Identical in construction to FST X30

FSM-2: X31	Travelling cable 400V AC	FSM-2 terminal strip
1	N	X18.5
2	L1 AC door	X18.4
3	L2 AC door	X18.3
4	L3 AC door	X18.2
5	N car lighting	X19.3
6	L car lighting	X19.7
7	L shaft light button	X26.3
8	L shaft light	X26.4
9	PE	X19.5

FSM-2: X32	Travelling cable	FSM-2 terminal strip
1	Car door side A	X3.1
2	Car door side B	X3.4
3	Car door side C	X3.6
4	Car emergency stop	X2.1
5	Bypass UP	X27.1
6	Bypass DOWN	X27.3
7	Bypass ON	X27.5
8	Bypass	X214.
9	N safety circuit	X27.7

10.4 FPM-1 car operating panel module

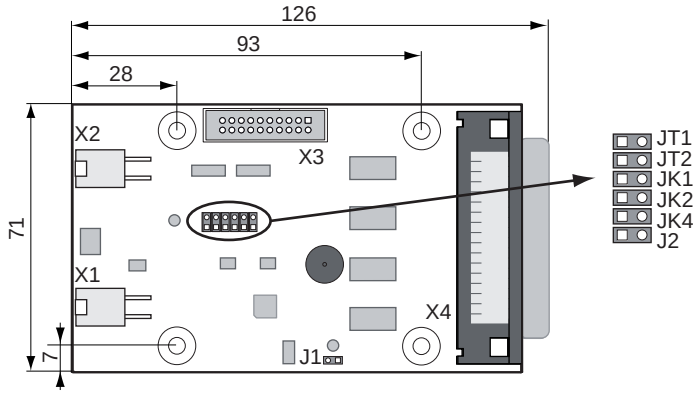

Circuit board marking FPM-1 V2

The new V2.x version of circuit board FPM-1 has the same jumper functions as version V1.x except that a buzzer has been added here. This can be assigned the same functions as the buzzer of the FPM-2.

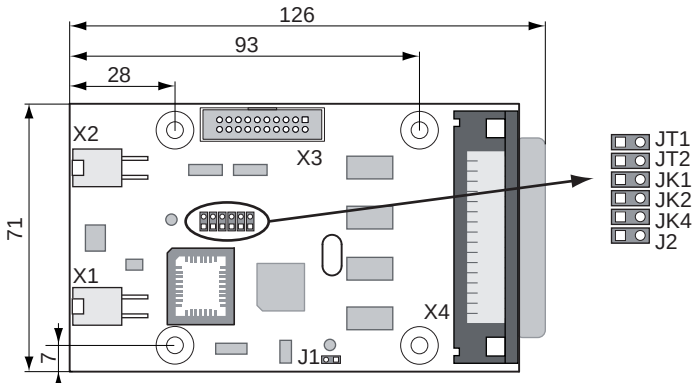

Circuit board marking FPM-1

10.4.1 FPM-1 jumpers

The service jumper J1 is not plugged in.

Car door assignment	Mode	JT1	JT2	J2
Door A	single door mode	open	open	open
Door B	single door mode	plugged	open	open
Door C	single door mode	open	plugged	open
Door A+B	dual door mode	open	open	plugged
Door A + B (fireman input X4.4, loading button X4.34 act on door B.)	dual door mode	open	plugged	plugged
Door B + A (calls A and B switched)	dual door mode	plugged	open	plugged

FST / car assignment	Operating mode	JK1	JK2	JK4
FST A	single or group mode	open	open	open
FST B	group mode	plugged	open	open
FST C	group mode	open	plugged	open
FST D	group mode	plugged	plugged	open
FST E	group mode	open	open	plugged
FST F	group mode	plugged	open	plugged
FST G	group mode	open	plugged	plugged
FST H	group mode	plugged	plugged	plugged

Car assignments of the FSM-2 car top control module and the FPM-1 car operating panel module must be identical.

10.4.2 FPM-1 terminal strips and sockets

Bus connections

X1, X2 LON bus car

FPM-1: X3	Car call extension
1	+ 24 V
2	+ 24 V
3	+ 5 V
4	+ 5 V
5	Reset of SPI drivers
6	GND
7	Serial cycle
8	GND
9	Serial output
10	GND
11	Serial input
12	GND
13	SPI select 3 (car call 48..63)
14	GND
15	SPI select 2 (car call 32..47)
16	GND
17	SPI select 1 (car call 16..31)
18	GND
19	FPE detection
20	GND

FPM-1: X4	Colour code	Car panel signals in "single door mode"	Car panel signals in "dual door mode"	Technical details
1	wh	Button "Fan ON"	Button "Fan ON"	I; L
2	br	Door close button B	Door close button B	I; L
3	gn	Door close button A	Door close button A	I; L
4	ye	Key switch fireman service	Key switch fireman service	I; L
5	gr	Display 2 *	Display 2 *	I/O; L 250 mA / 24 V
6	pk	Overload display	Overload display	I/O; L 250 mA / 24 V
7	bl	Direction UP	Direction UP	I/O; L 250 mA / 24 V
8	rd	+ 24 V	+ 24 V	P
9	bk	Position indicator 6	Position indicator 6	I/O; L 250 mA / 24 V
10	pr	Position indicator 3	Position indicator 3	I/O; L 250 mA / 24 V
11	gr pk	Position indictor 0 (LSB)	Position indictor 0 (LSB)	I/O; L 250 mA / 24 V
12	rd bl	Car call 15	Car call 07 door side B	I/O; L 250 mA / 24 V
13	wh gn	Car call 12	Car call 04 door side B	I/O; L 250 mA / 24 V
14	br gn	Car call 09	Car call 01 door side B	I/O; L 250 mA / 24 V
15	wh ye	Car call 06	Car call 06 door side A	I/O; L 250 mA / 24 V
16	ye br	Car call 03	Car call 03 door side A	I/O; L 250 mA / 24 V
17	wh gr	Car call 00	Car call 00 door side A	I/O; L 250 mA / 24 V
18	gr br	GND	GND	P
19	wh pk	GND	GND	P

FPM-1: X4	Colour code	Car panel signals in "single door mode"	Car panel signals in "dual door mode"	Technical details
20	pk br	GND	GND	P
21	wh bl	GND	GND	P
22	br bl	+ 24 V	+ 24 V	P
23	wh rd	+ 24 V	+ 24 V	P
24	br rd	+ 24 V	+ 24 V	P
25	wh bk	Position indicator 7 (MSB)	Position indicator 7 (MSB)	I/O; L 250 mA / 24 V
26	br bk	Position indicator 4	Position indicator 4	I/O; L 250 mA / 24 V
27	gr gn	Position indicator 1	Position indicator 1	I/O; L 250 mA / 24 V
28	ye gr	Car call release	Car call release	O; L 250 mA / 24 V
29	pk gn	Car call 13	Car call 05 door side B	I/O; L 250 mA / 24 V
30	ye pk	Car call 10	Car call 02 door side B	I/O; L 250 mA / 24 V
31	gn bl	Car call 07	Car call 07 door side A	I/O; L 250 mA / 24 V
32	ye bl	Car call 04	Car call 04 door side A	I/O; L 250 mA / 24 V
33	gn rd	Car call 01	Car call 01 door side A	I/O; L 250 mA / 24 V
34	ye rd	Landing control OFF or "loading control" button (see FST manual)		I; L
35	gn bk	Door open button B or partition door button (see FST manual)		I; L
36	ye bk	Door open button A	Door open button A	I; L
37	gr bl	Key switch car priority	Key switch car priority	I; L
38	pk bl	Display 1 *	Display 1 *	I/O; L 250 mA / 24 V
39	gr rd	Display 0 *	Display 0 *	I/O; L 250 mA / 24 V
40	pk rd	Direction DOWN	Direction DOWN	I/O; L 250 mA / 24 V
41	gr bk	GND	GND	P
42	pk bk	Position indicator 5	Position indicator 5	I/O; L 250 mA / 24 V
43	bl bk	Position indicator 2	Position indicator 2	I/O; L 250 mA / 24 V
44	rd bk	Secondary car call release (e.g. active with card readers in car)		I/O; L 250 mA / 24 V
45	wh br bk	Car call 14	Car call 06 door side B	I/O; L 250 mA / 24 V
46	ye gn bk	Car call 11	Car call 03 door side B	I/O; L 250 mA / 24 V
47	pk gr bk	Car call 08	Car call 00 door side B	I/O; L 250 mA / 24 V
48	bk bl rd	Car call 05	Car call 05 door side A	I/O; L 250 mA / 24 V
49	wh gn bk	Car call 02	Car call 02 door side A	I/O; L 250 mA / 24 V
50	gn br bk	+ 24 V	+ 24 V	P

10.5 FPM-2

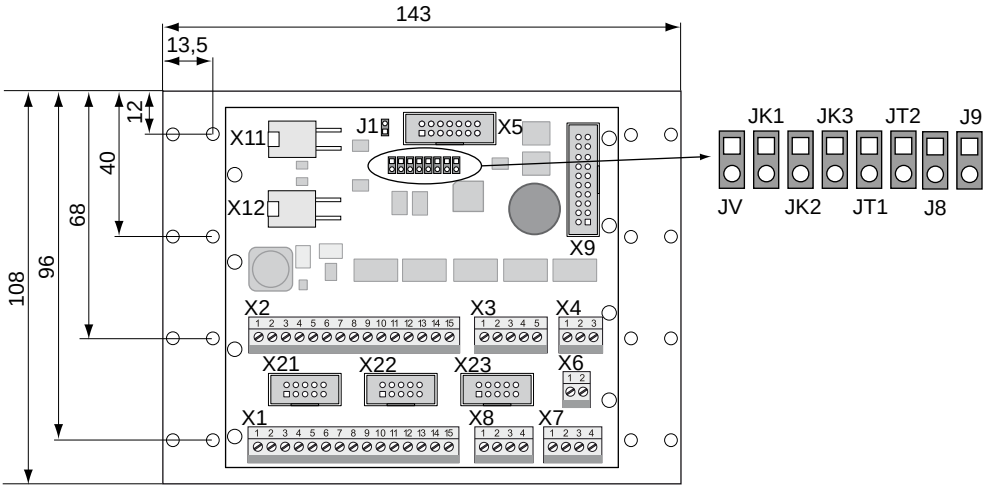

Circuit board marking FPM-2_V2

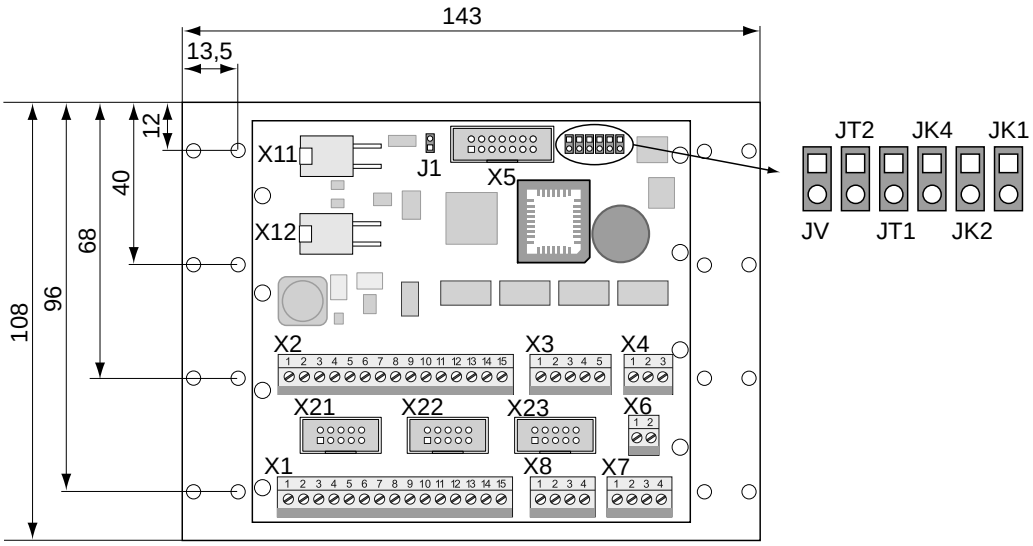

Circuit board marking FPM-2

10.5.1 FPM-2 jumpers

The service jumper J1 is not plugged in.

Car door assignment	Door mode	JT1	JT2
Door A	single door mode	open	open
Door B	single door mode	plugged	open
Door C	single door mode	open	plugged
Door A+B	dual door mode	plugged	plugged

FST / car assignment	Operating mode	JK1	JK2	JK4 / JK3 from V2.x
FST A ✶	single or group mode	open	open	open
FST B	group mode	plugged	open	open
FST C	group mode	open	plugged	open

FST / car assignment	Operating mode	JK1	JK2	JK4 / JK3 from V2.x
FST D	group mode	plugged	plugged	open
FST E	group mode	open	open	plugged
FST F	group mode	plugged	open	plugged
FST G	group mode	open	plugged	plugged
FST H	group mode	plugged	plugged	plugged

Car assignments of the FSM-2 car top control module and the FPM-2 car operating panel module must be identical.

Installation position EAZ-256.64	JV
Vertical installation position	plugged ✶
Horizontal installation position	open

Jumpers J8 and J9 are not yet assigned.

10.5.2 FPM-2 terminal strips and sockets

Bus connections

X11, X12 LON bus

FPM-2 X1	Function single door mode	Function dual door mode	Connected to	Technical details
1	+24V	+24V	FPM-2 X21.10	P
2	Car call 00	Car call 00 A	FPM-2 X21.1	I/O; L; 250 mA / 24 V
3	Car call 01	Car call 01 A	FPM-2 X21.2	I/O; L; 250 mA / 24 V
4	Car call 02	Car call 02 A	FPM-2 X21.3	I/O; L; 250 mA / 24 V
5	Car call 03	Car call 03 A	FPM-2 X21.4	I/O; L; 250 mA / 24 V
6	Car call 04	Car call 04 A	FPM-2 X21.5	I/O; L; 250 mA / 24 V
7	Car call 05	Car call 05 A	FPM-2 X21.6	I/O; L; 250 mA / 24 V
8	Car call 06	Car call 06 A	FPM-2 X21.7	I/O; L; 250 mA / 24 V
9	Car call 07	Car call 07 A	FPM-2 X21.8	I/O; L; 250 mA / 24 V
10	Car call release 01	Car call release 01	FPM-2 X21.9	O; L; 250 mA / 24 V
11	Door open button	Door open button A	FPM-2 X23.1	I/O; L; 250 mA / 24 V
12	Door close button	Door close button A	FPM-2 X23.2	I/O; L; 250 mA / 24 V
13	Key switch car priority	Key switch car priority	FPM-2 X23.7	I; L; 250 mA / 24 V
14	Button "Fan ON"	Button "Fan ON"	FPM-2 X23.5	I; L; 250 mA / 24 V
15	GND	GND	FPM-2 X23.9	P

FPM-2 X2	Function single door mode	Function dual door mode	Connected to	Technical details
1	+24V	+24V	FPM-2 X22.10	P
2	Car call 08	Car call 00 B	FPM-2 X22.1	I/O; L; 250 mA / 24 V
3	Car call 09	Car call 01 B	FPM-2 X22.2	I/O; L; 250 mA / 24 V
4	Car call 10	Car call 02 B	FPM-2 X22.3	I/O; L; 250 mA / 24 V
5	Car call 11	Car call 03 B	FPM-2 X22.4	I/O; L; 250 mA / 24 V

FPM-2 X2	Function single door mode	Function dual door mode	Connected to	Technical details
6	Car call 12	Car call 04 B	FPM-2 X22.5	I/O; L; 250 mA / 24 V
7	Car call 13	Car call 05 B	FPM-2 X22.6	I/O; L; 250 mA / 24 V
8	Car call 14	Car call 06 B	FPM-2 X22.7	I/O; L; 250 mA / 24 V
9	Car call 15	Car call 07 B	FPM-2 X22.8	I/O; L; 250 mA / 24 V
10	Car call release 02	Car call release 02	FPM-2 X22.9	O; L; 250 mA / 24 V
11	Door open button	Door open button B	FPM-2 X23.3	I; L; 250 mA / 24 V
12	Door close button	Door close button B	FPM-2 X23.4	I; L; 250 mA / 24 V
13	Key switch fireman service	Key switch fireman service	FPM-2 X23.6	I; L; 250 mA / 24 V
14	Pin 34 function	Pin 34 function	FPM-2 X23.8	I; L; 250 mA / 24 V
15	GND	GND	FPM-2 X23.9	P

FPM-2 X3	Designation	Technical details
1	+24V	P
2	Display 1 *	O; L; 250 mA / 24 V
3	Display 2 *	O; L; 250 mA / 24 V
4	Display 0 *	O; L; 250 mA / 24 V
5	GND	P

FPM-2 X4	Designation	Technical data
1	Direction UP	O; L; 250 mA / 24 V
2	Direction DOWN	O; L; 250 mA / 24 V
3	+24V	P

FPM-2 X6	Designation	Technical data
1	Car call release 01	O
2	Car call release 02	O

FPM-2 X7 FPM-2 X8	Designation	Technical data
1	Emergency light	P
2	GND	P
3	Emergency call (COM)	
4	Emergency call (NC)	

The EAZ-256.64 can be connected to the FPM-2 X5. This EAZ does not then require its own LON nodes.

The LON bus is connected to X11 and X12 with the usual 4-pin bus connector.

The following pin headers X21, X22 and X23 serve for the connection of the so-called HUNIOLIFT buttons by means of a 10-pin ribbon cable.

FPM-2 X21	Designation	Technical details
X21.1	Car call 00	I/O; L; 250 mA / 24 V
X21.2	Car call 01	I/O; L; 250 mA / 24 V

FPM-2 X21	Designation	Technical details
X21.3	Car call 02	I/O; L; 250 mA / 24 V
X21.4	Car call 03	I/O; L; 250 mA / 24 V
X21.5	Car call 04	I/O; L; 250 mA / 24 V
X21.6	Car call 05	I/O; L; 250 mA / 24 V
X21.7	Car call 06	I/O; L; 250 mA / 24 V
X21.8	Car call 07	I/O; L; 250 mA / 24 V
X21.9	Car call release 01	O; L; 250 mA / 24 V
X21.10	+24V	P

FPM-2 X22	Designation	Technical details
X22.1	Car call 08	I/O; L; 250 mA / 24 V
X22.2	Car call 09	I/O; L; 250 mA / 24 V
X22.3	Car call 10	I/O; L; 250 mA / 24 V
X22.4	Car call 11	I/O; L; 250 mA / 24 V
X22.5	Car call 12	I/O; L; 250 mA / 24 V
X22.6	Car call 13	I/O; L; 250 mA / 24 V
X22.7	Car call 14	I/O; L; 250 mA / 24 V
X22.8	Car call 15	I/O; L; 250 mA / 24 V
X22.9	Car call release 01	O; L; 250 mA / 24 V
X22.10	+24V	P

FPM-2 X23	Designation	Technical details
X23.1	Door open button A	I; L; 250 mA / 24 V
X23.2	Door close button A	I; L; 250 mA / 24 V
X23.3	Door open button B	I; L; 250 mA / 24 V
X23.4	Door close button B	I; L; 250 mA / 24 V
X23.5	Fan	I; L; 250 mA / 24 V
X23.6	Fire recall	I; L; 250 mA / 24 V
X23.7	Priority	I; L; 250 mA / 24 V
X23.8	Loading	I; L; 250 mA / 24 V
X23.9	GND	P
X23.10	+24V	P

10.6 EAZ-256/40 and EAZ256/64

10.6.1 FPM-2 jumpers

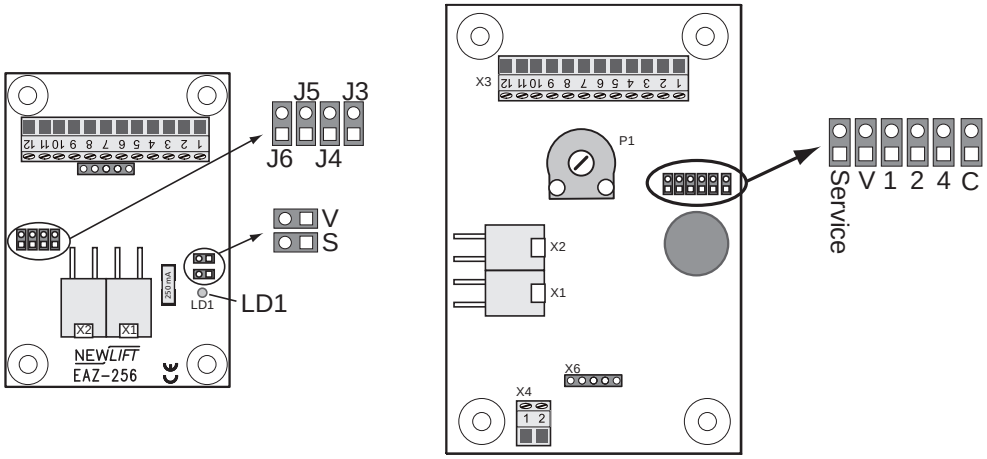

Circuit board marking EAZ-256/40_V2 and EAZ-256/64_V2

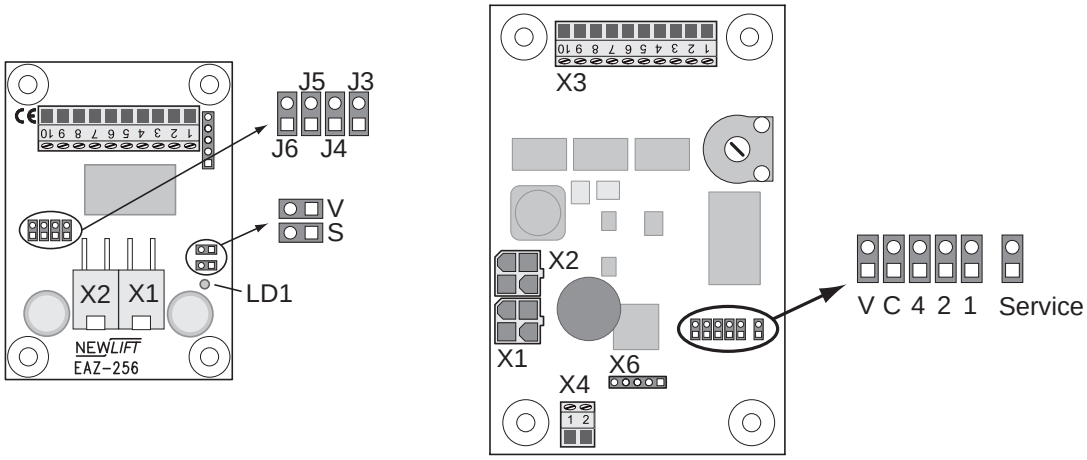

Circuit board marking position indicators EAZ-256/40 and EAZ-256/64

The service jumper JS (EAZ-256/40) resp. JService (EAZ-256/64) is not plugged in.

FST / car assignment	EAZ-256/40 J3 EAZ-256/64 J1	EAZ-256/40 J4 EAZ-256/64 J2	EAZ-256/40 J5 EAZ-256/64 J4
FST A	open	open	open
FST B	plugged	open	open
FST C	open	plugged	open
FST D	plugged	plugged	open
FST E	open	open	plugged
FST F	plugged	open	plugged
FST G	open	plugged	plugged
FST H	plugged	plugged	plugged

Installation location	EAZ-256/40 J6 EAZ-256/64 JC
landing	open
car	plugged

Installation position	EAZ-256/40 JV EAZ-256/64 JV
horizontal	open
vertical	plugged

10.6.2 Connection properties

X3	EAZ-256/40	EAZ-256/64
1	+ 24 V	+ 24 V
2	Landing call UP	Landing call UP
3	Landing call DOWN	Landing call DOWN
4	Landing call release	Landing call release
5	Direction UP	Direction UP
6	Direction DOWN	Direction DOWN
7	Chime trigger	+24 V
8	Key switch 1	Key switch 1
9	Key switch 2	Key switch 2
10	GND	GND
11	Currently no function	From Version 2.x
12	Currently no function	From Version 2.x

10.7 ADM-S and ADM-D

10.7.1 Connection properties

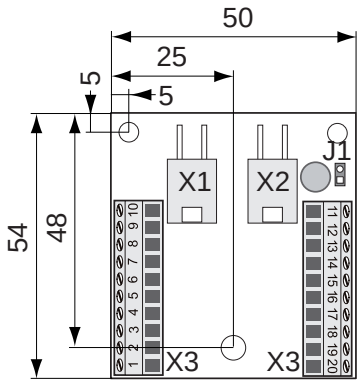

Circuit board marking ADM-S and ADM-D

ADM-S X3 ADM-D X3	ADM-S Function / programming	ADM-D Function / programming	Technical details
1	+ 24 V	+ 24 V	P
2	Landing call UP	Landing call UP	I/O; L; 350 mA / 24 V
3	Landing call DOWN	Landing call DOWN	I/O; L; 350 mA / 24 V
4	Landing call release	Landing call release	O; L; 350 mA / 24 V
5	+ 24 V	+ 24 V	P
6	Out-of-order, occupied indicator, special drive	Occupied display, left	O; L; 350 mA / 24 V
7	Chime, floor position 5, Landing prio display	Chime left, special drive	O; L; 350 mA / 24 V
8	Direction UP	Direction UP left	O; L; 350 mA / 24 V
9	Direction DOWN	Direction DOWN left	O; L; 350 mA / 24 V
10	GND	GND	P
11	GND	GND	P
12	Key switch 1: fire recall, fire recall selective, fire recall reset, landing prio, landing prio selective, landing prio super, remote shutdown, remote shutdown selective, smoke alarm, soft switch	Key switch 1: fire recall, fire recall selective, fire recall reset, landing prio, landing prio selective, landing prio super, remote shutdown, remote shutdown selective, smoke alarm, soft switch	I; L
13	Key switch 2: fire recall, fire recall selective, fire recall reset, landing prio, landing prio selective, landing prio super, remote shutdown, remote shutdown selective, smoke alarm, soft switch	Key switch 2: fire recall, fire recall selective, fire recall reset, landing prio, landing prio selective, landing prio super, remote shutdown, remote shutdown selective, smoke alarm, soft switch	I; L
14	Floor position 4, landing prio display, soft output 0, soft output 1, acoustic click	Landing prio display, acoustic click	O; L; 350 mA / 24 V

ADM-S X3 ADM-D X3	ADM-S Function / programming	ADM-D Function / programming	Technical details
15	+ 24 V	+ 24 V	P
16	Floor position bit 0	Direction DOWN right	O; L; 350 mA / 24 V
17	Floor position bit 1	Direction UP right	O; L; 350 mA / 24 V
18	Floor position bit 3	Occupied display, right	O; L; 350 mA / 24 V
19	Floor position bit 2	Chime right, special drive	O; L; 350 mA / 24 V
20	GND	GND	P

10.8 ADM-3

10.8.1 Connection properties

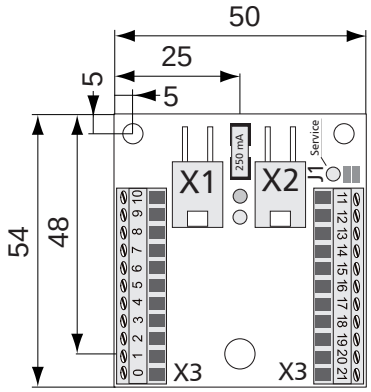

Circuit board marking ADM-S and ADM-D

ADM-3 X3	Single function / Programming	Double function / Programming	Technical details
0	Attika, bank control mode with user group, prio selective call	Prio selective call	
1	+ 24 V	+ 24 V	P
2	Landing call UP	Landing call UP	I/O; L; 350 mA / 24 V
3	Landing call DOWN	Landing call DOWN	I/O; L; 350 mA / 24 V
4	Landing call release	Landing call release	O; L; 350 mA / 24 V
5	+ 24 V	+ 24 V	P
6	Out-of-order, occupied indicator, special drive	Occupied display, left	O; L; 350 mA / 24 V
7	Chime, floor position 5	Chime left, special drive	O; L; 350 mA / 24 V
8	Direction UP	Direction UP left	O; L; 350 mA / 24 V
9	Direction DOWN	Direction DOWN left	O; L; 350 mA / 24 V
10	GND	GND	P
11	GND	GND	P

ADM-3 X3	Single function / Programming	Double function / Programming	Technical details
12	Key switch 1: fire recall, fire recall selective, fire recall reset, landing prio, landing prio selective, landing prio super, remote shutdown, remote shutdown selective, smoke alarm, soft switch	Key switch 1: fire recall, fire recall selective, fire recall reset, landing prio, landing prio selective, landing prio super, remote shutdown, remote shutdown selective, smoke alarm, soft switch	I; L
13	Key switch 2: fire recall, fire recall selective, fire recall reset, landing prio, landing prio selective, landing prio super, remote shutdown, remote shutdown selective, smoke alarm, soft switch	Key switch 2: fire recall, fire recall selective, fire recall reset, landing prio, landing prio selective, landing prio super, remote shutdown, remote shutdown selective, smoke alarm, soft switch	I; L
14	Floor position 4, landing prio display, soft output 0, soft output 1, acoustic click	Landing prio display, acoustic click	O; L; 350 mA / 24 V
15	+ 24 V	+ 24 V	P
16	Floor position bit 0	Direction DOWN right	O; L; 350 mA / 24 V
17	Floor position bit 1	Direction UP right	O; L; 350 mA / 24 V
18	Floor position bit 3	Occupied display, right	O; L; 350 mA / 24 V
19	Floor position bit 2	Chime right, special drive	O; L; 350 mA / 24 V
20	GND	GND	P
21	Attika, bank control mode with user-group, prio selective call, soft output 0	Prio selective call	

10.9 ADM-XF and ADM-XK

10.9.1 Connection properties

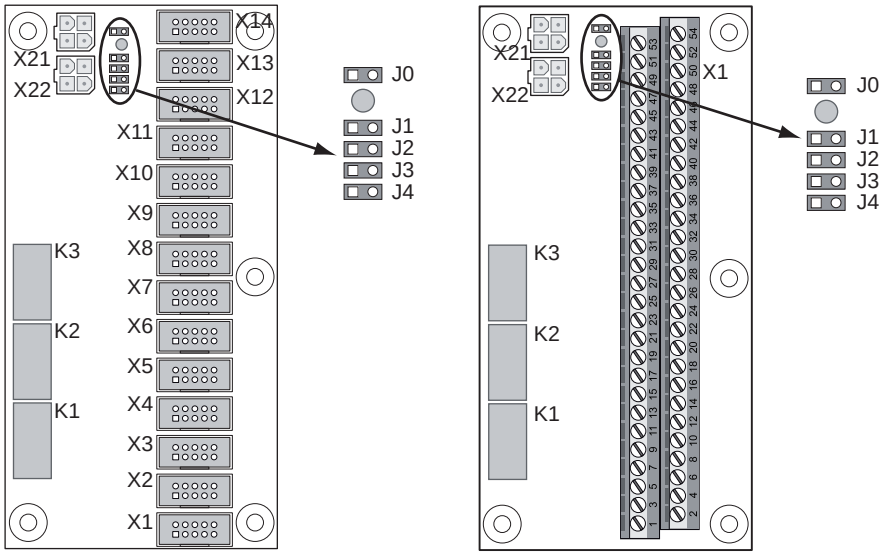

Circuit board marking ADM-XF and ADM-XK

10.9.2 ADM-XF and ADM-XK jumpers

The following table lists the floor and door side assignment for the ADM.XF and the ADM.XK. The binary value comprises from right to left the jumper positions of jumpers J1, J2, J3 and J4 (1=closed, 0=open).

Column ADM-XF lists the respective sockets, column ADM-XK the respective terminals for the settings.

ADM-XF	ADM-XK	0000	0001	0010	0011	0100	0101	0110	0111	1000	1001	1010	1011	1100	1101	1110
X1	27 / 28	0A	0B	0B	0B	0B	0A	0A	0A	0A	0A	0A	0A	0B	14A	28A
X2	29 / 30	1A	1A	1B	1B	1B	1B	1A	1A	1A	1A	1A	1B	1A	15A	29A
X3	31 / 32	2A	2A	2A	2B	2B	2A	2B	2A	2A	2A	2A	2A	2B	16A	30A
X4	33 / 34	3A	3A	3A	3A	3B	3A	3A	3B	3A	3A	3A	3B	3A	17A	31A
X5	35 / 36	4A	4A	4A	4A	4A	4A	4A	4A	4A	4A	4A	4A	4B	18A	32A
X6	37 / 38	5A	5A	5A	5A	5A	5A	5A	5A	5A	5A	5A	5B	5A	19A	33A
X7	39 / 40	6A	6A	6A	6A	6A	6A	6A	6A	6A	6A	6A	6A	6B	20A	34A
X8	41 / 42	7A	7A	7A	7A	7A	7A	7A	7A	0B	7A	7A	7B	7A	21A	35A
X9	43 / 44	8A	8A	8A	8A	8A	8A	8A	8A	1B	8A	8A	8A	8B	22A	36A
X10	45 / 46	9A	9A	9A	9A	9A	9A	9A	9A	2B	9A	9A	9B	9A	23A	37A
X11	47 / 48	10A	10A	10A	10A	10A	10A	10A	10A	3B	10A	0B	10A	10B	24A	38A
X12	49 / 50	11A	11A	11A	11A	11A	11A	11A	11A	4B	0B	1B	11B	11A	25A	39A
X13	51 / 52	12A	12A	12A	12A	12A	12A	12A	12A	5B	1B	2B	12A	12B	26A	40A
X14	53 / 54	13A	13A	13A	13A	13A	13A	13A	13A	6B	2B	3B	13B	13A	27A	41A

10.9.3 ADM-XF and ADM-XK terminal strips and sockets

ADM.XF X1 ... X14	Function	Wire colour	Technical details
1	+24 V	white (wh)	P
2	Landing call UP	brown (br)	I/O; L; 250 mA / 24 V
3	Landing call DOWN	green (gn)	I/O; L; 250 mA / 24 V
4	Release	yellow (ye)	O; L; 25 mA / 24 V °
5	Occupied indicator	grey (gr)	O; L; 40 mA / 24 V *
6	Direction UP	pink (pk)	O; L; 40 mA / 24 V *
7	Direction DOWN	blue (bl)	O; L; 40 mA / 24 V *
8	Key switch 1	red (rd)	I; L
9	Key switch 2	black (bk)	I; L
10	GND	purple (pr)	P

ADM.XK X1	Function	Technical details
1, 3, 5, 7	Occupied display	O; L; 140 mA / 24 V *
2, 6	GND	P
4	Key switch 2 (switched in parallel or jointly used with terminal 8 - 16, 18, 20, 22, 24, 26)	I; L
8	Key switch	I; L
9, 11, 13, 15	Direction UP	O; L; 140 mA / 24 V *
10, 12, 14, 16	Direction DOWN	O; L; 140 mA / 24 V *
17, 19, 21, 23, 25	+24V	P
18, 20, 22, 24, 26	Release	O; L; 70 mA / 24 V °
27	Landing call 00 UP	I/O; L; 250 mA / 24V
28	Landing call 00 DOWN	I/O; L; 250 mA / 24V
29, 31, ..., 53	Landing call 1 UP, landing call 2 UP, ... Landing call 13 UP	I/O; L; 250 mA / 24V
30, 32, ..., 54	Landing call 01 DOWN, landing call 2 DOWN, ..., landing call 13 DOWN	I/O; L; 250 mA / 24V

11 Commissioning the GST-XT

11.1 General

On delivery, the GST-XT controller is preconfigured to your specific requirements. Commissioning the GST-XT controller therefore only involves setting (checking) a few parameters and performing a few simple tests to check the group function. The GST-XT controller is not commissioned until after all FST-3-Controllers participating in group mode have been commissioned. The following requirements must be met for all lifts participating in group mode prior to commissioning of the GST-XT controller:

› Fully commissioned shaft positioning system (calibration drive successfully completed)
› All land call modules are connected to the appropriate control cabinets as per the bus plan
› Enabled and functional landing control
› Establish LON BUS cable connection between GST-XT and FST. See bus diagram.
› All shaft buses are functional, any necessary power repeaters (shaft or controller) are connected to LON BUS according to bus diagram and to the supply voltage (see wiring diagram) and are ready for operation.
› Released and functional car doors (test menu)

All parameters mentioned in the following can be found in the FST and GST-XT menu. The GST-XT menu is available on all FST controllers that participate in group mode.

11.2 Commissioning steps

The GST-XT controller is commissioned in the following steps

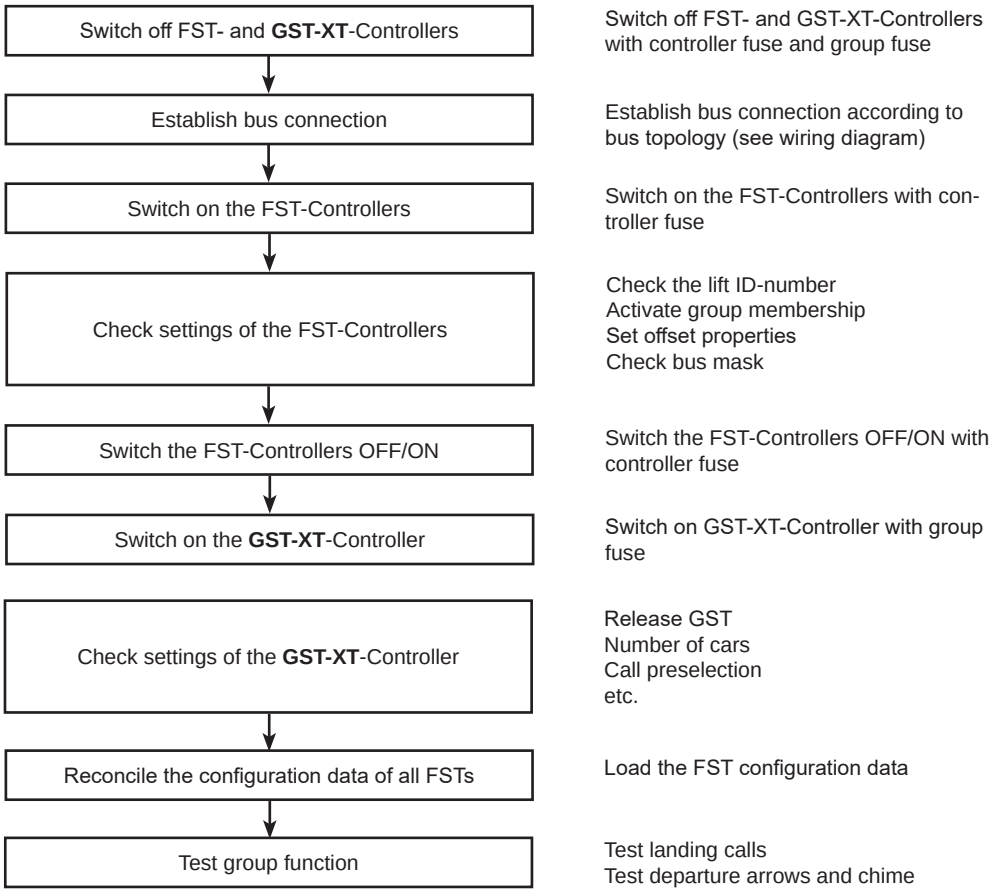

GST-XT commissioning steps

11.2.1 Switch off FST- and GST-XT controllers

Switch off all FST controllers with controller fuse F4 and GST-XT group controller with F6.

The designations of the controller and group fuses may differ from the previous controller, FST(-1). If necessary, check this using the wiring diagrams.

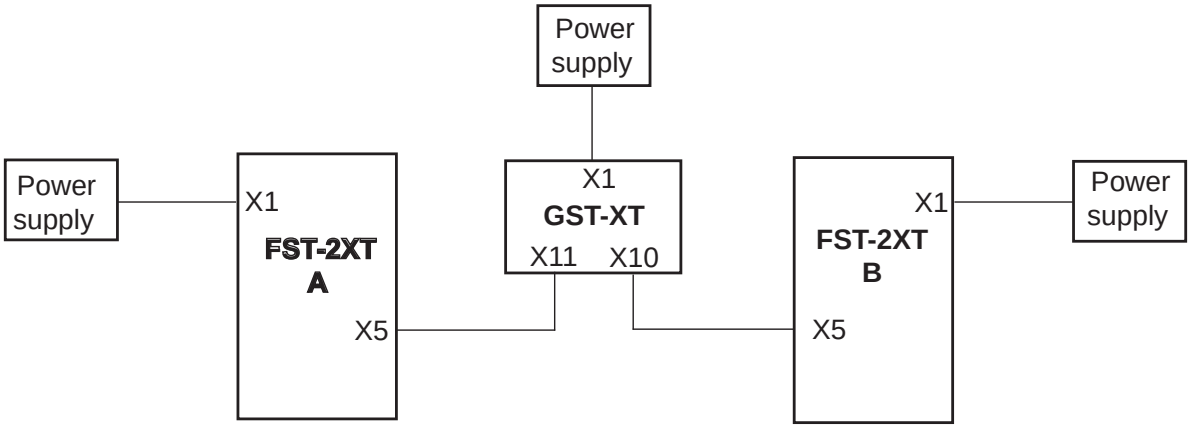

GST-XT

The bus connection plugs of the FST controllers may differ from the previous controller, FST(-1)! If necessary, use the wiring diagrams to check this.

11.2.2 Establishing bus connections

To ensure communication of the FST controllers participating in group mode with the GST-XT controller, the connection cables between the individual FST control cabinets must be plugged-in according to the bus diagram.

Plugging-in bus cables

- ► Have the wiring diagrams of each of the FST controllers participating in group mode at hand and open the bus diagram (last page before the legend: "Bus topology")
- ► Establish the cross connections between the FST control cabinets specified in the bus plan using the bus cables intended for this purpose
- ► Be certain to plug in terminators - designation "T" - according to bus diagram
- ► Now switch on the FST controllers with controller fuse. Wait until the boot process of the FST controllers has concluded.

11.2.3 Checking basic settings in the FST controllers

The basic settings of all FST controllers participating in group mode are checked in the FST under:

› `--FST INFORMATION--`
› `MAIN MENU / Config / Group Settings.`
› `MAIN MENU / Calls / Call Floor`

Checking the lift ID-numbers

- ▶ Simultaneously press [Enter]+ [Shift] `--FST INFORMATION--` appears on the first line
- ▶ Use the [▼] button to scroll until the `LiftID:` appears
- ▶ Note the ID number: `ABCDEFGH`

- ▶ Press [Enter] to exit the FST information menu
- ▶ Under `MAIN MENU / Config / Group Settings / Lift ID-Number`, compare the ID number set here with the ID number noted previously
- ▶ Both IDs must match
- ▶ Repeat the procedure for all FST controllers participating in group mode.

Only change the IDs in consultation with the NEW *LIFT* service line!

All FST controllers participating in group mode must have a unique lift ID-number (FST A (No.0) ... FST H (No.7)).

The lift ID-number must correspond to the jumper settings (see wiring diagram) of bus modules FSM and FPM as well as the configuration of the land call modules. If not observed, function of the FST controllers cannot be guaranteed! Lift ID-numbers that are assigned twice lead to massive malfunctions of the GST-XT and FST controllers!

Activate all FSTs as group members

Select under `MAIN MENU / Config / Group Settings / Group Member`

- ▶ Set `YES` with [▲]/[▼] and confirm with [Enter].

Setting offset properties

The group offset is the offset between the shafts of the FST controllers participating in group mode.

If the bottom floor of all FST controllers is the same physical floor of the building, the group offset = 0 (normal case). If this is not the case, the group offset of the FST controller that travels to the bottom floor is to be set to 0; for the other FST controllers, the value is to be set so that it corresponds to the floor offset of the shafts.

Error-free function of the GST-XT controller board is ensured only if the group offset is set correctly.

In the event of uncertainties regarding the group offset, contact the NEW *LIFT* service line!

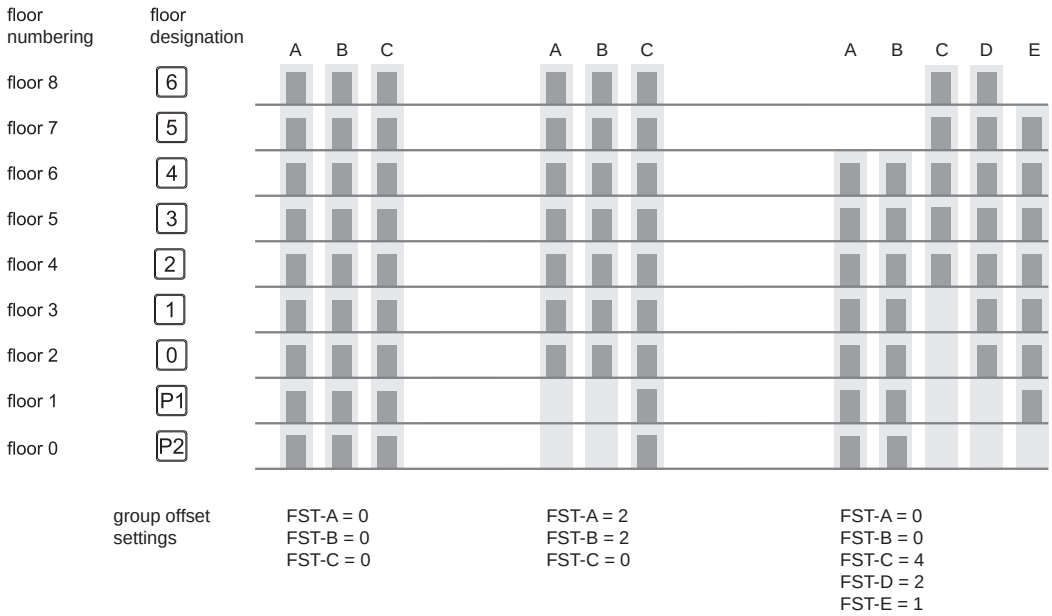

Group offset

Setting offset properties

- ▶ `MAIN MENU / Config / Group Settings / Group Floor Offset.`
- ▶ Set the group offset with ▲ and confirm with Enter.
- ▶ Repeat the procedure for all FST-3 controllers participating in group mode

If one of the FST controller has a group offset > 0, specify for this FST controller whether or not the set value is to affect control of the floor position indicator and departure arrow. This occurs separately for the position indicators in the car (flr offset-car) and on the floors (flr offset-landing).

Offset properties for position indicators car & landing

- ▶ Select `MAIN MENU / Config / Group Settings / Flr Offset-Car` or `Flr Offset-Landing.`
- ▶ Use ▲/▼ to set `YES` or NO and confirm with Enter.
- ▶ Repeat the procedure for all FST controllers whose group offset is > 0.

How the group offset affects control of the floor position indicators and departure arrows is now set.

Correct function of the floor position indicators and departure arrows is only ensured if parameters Flr Offset-Car / Landing are set correctly.

In the event of uncertainties, contact the NEW *LIFT* service line.

Checking bus masks

The FST menu of each FST controller has two bus masks that define to which bus lines of the landing control this FST controller responds (ADM-Bus Mask-1 and ADM-Bus Mask-2). Bus-Mask 1 defines to which landing lines the FST controller responds in normal group mode. Bus-Mask 2 defines to which bus lines the FST controller responds if individual lifts were separated from the group (e.g. by a programmable input/output).

The Bus-Mask 1/2 parameters are 8-bit registers with the following structure:

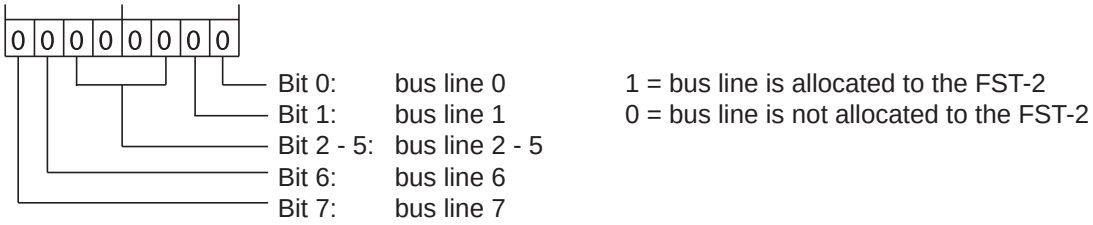

Structure of the Bus-Mask 1 / 2 parameters

Adjust standard setting bus masks

- ▶ `Select MAIN MENU / Config / Group Settings / ADM-Bus Mask-1.`
- ▶ Select the individual figures with ◀ ▶ and set the two figures to `FF` with ▲/▼ and confirm with Enter.
- ▶ Repeat the procedure for all FST controllers.

Normally, the value FF is set for both bus masks, i.e. calls from all bus lines can be sent to all participating FST controllers.

Only in special cases or if lifts are dynamically separated from the group is a setting other than FF necessary.

Proper function of the GST-XT controller boards is ensured only if the bus masks are properly set.

In the event of uncertainties, contact the NEW *LIFT* service line.

Checking the call configuration

The calls of the floors must be in agreement with all other FSTs!

- ▶ Use `MAIN MENU / Calls / Call Floor` to check the calls of all floors
- ▶ To do this, press and hold down the Shift button and also press ▲ or ▼ to select the individual calls for the floors `Call Floor [XX].`
- ▶ Now check the set call of all floors and compare them with all FSTs
- ▶ If necessary, adjust the call configuration with Enter under `Config : .`

Concluding the check of the basic settings of the FSTs for group mode

- ▶ Now press the ◀ button several times to exit the submenu or main menu of the FST.
- ▶ If parameters were changed, the `Save changed values?` message appears, prompting for confirmation. Use the > Y E S < button if a change was knowingly made.

  Confirm selection by pressing the Enter button. The standard display then appears as shown in, e.g., Chapter 3.2.1.
- ▶ Now use the controller fuse to switch the FST controllers OFF and back ON again.

  Wait until the boot process of the FST controllers has concluded.

11.2.4 Checking basic settings in the GST-XT controller

The basic settings of the GST-XT (via FST) are checked under:

› MAIN MENU / GST MENU / Configuration

Enabling the group controller

▶ Select MAIN MENU / GST-Menu / Configuration / GST Enable
▶ Confirm selection with Enter
▶ Select YES with ▲ and confirm with Enter

Setting the group size

▶ Select MAIN MENU / GST-Menu / Configuration / Number of cars
▶ Confirm selection with Enter
▶ Use ▲/▼ to set the number of lifts participating in group mode and confirm with Enter

11.2.5 Check the status of the systems

Communication between the FST controllers and the GST-XT controller boards is functioning properly if:

› LEDs A ... H of the respective FST controllers constantly illuminate
› A "G" appears in line D, column 10 of the display of all FST controllers
› The FST controllers participating in group mode run in normal mode

Checking the status

The status of the FST controllers participating in group mode is shown in the GST-XT menu.

▶ Select MAIN MENU / GST-Menu / Status Display
▶ Confirm selection with Enter
▶ Use ▼ to display the status of all systems

11.2.6 Loading FST configuration data in the GST-XT

Initialisation of the FST configuration data (Config File) in the GST-XT controller is used for the initial reading-in of the control parameters of all connected FST controllers, particularly the assignment tables for landing calls and shaft doors.

Loading FST parameters

▶ Select MAIN MENU / GST-Menu / Configuration / Load FST Config
▶ Select YES with ▶ and confirm with Enter

The parameter sets of all connected FST controllers are transferred to the GST-XT controller board via the LON bus. This procedure takes several seconds and is indicated by flashing of the corresponding LEDs A ... H and display of the Transfer: FST- X/X (X/X = FST ABCDEFG) message in the FST display.

Automatically loading FST parameters

Following successful group function test, complete by confirming the parameters, i.e., according to Chapter 8.2.7:

▶ MAIN MENU / GST MENU / Configuration / FST->GST auto-cfg
▶ Select YES with ▶ and confirm with Enter

The parameter sets of all connected FST controllers are now automatically transferred to the GST-XT controller board via the LON bus. This procedure is indicated in the same way as "Loading FST parame-

ters" via the LEDs of the GST-XT and in the FST display.

Completing the check of the GST-XT basic settings

- ▶ Now press the ◀ button several times to exit the submenu or main menu of the FST.
- ▶ If parameters were changed, the `Save changed values?` message appears, prompting for confirmation.
- ▶ Use the >YES< button if a change was knowingly made. Confirm selection by pressing the Enter button. The standard display then appears as shown in, e.g., Chapter *3.2.1*.

11.2.7 Testing group function

The function of the GST-XT controller is tested by actuating the landing call and observing the call acknowledgement and the departure arrows and floor position indicators. This procedure must be repeated step-by-step on all floors and access sides.

Test landing calls

- ▶ Actuate landing calls in both directions and observe the call acknowledgement.

  The call acknowledgements of all landing calls (all bus lines) illuminate in both directions of travel.

  One of the group lifts arrives on the floor and extinguishes all call acknowledgements in one direction of travel (all bus lines).
- ▶ Use a car call to send the lift that arrived in the direction of travel that was extinguished to a different floor (ideally, one as far away as possible).

  A second lift arrives at the floor and extinguishes the still-illuminated call acknowledgements (all bus lines).
- ▶ Repeat the procedure on all floors.

Test departure arrows and chime

- ▶ Actuate landing calls in both directions and observe the departure arrows.

  One of the group lifts arrives at the floor and activates its departure arrow in the current direction of travel.

  The arrival gong sounds.

  After the car call priority time elapses, both departure arrows are activated.
- ▶ Use a car call to send the lift to a different floor (ideally, one as far away as possible) and again actuate the landing calls.
- ▶ Repeat the procedure until the departure arrows and gongs of all group lifts have been activated once.
- ▶ Repeat the procedure on all floors.

Completing the group function test of the FST controllers and GST-XT

- ▶ *see 11.2.6 Loading FST configuration data in the GST-XT, page 168.*

The GST-XT controller is now commissioned.

12 Menu tree

12.1 General

The FST software is configured via the FST user interface or the HHT hand-held terminal with the help of the FST menu.

The S2-specific menu items of the FST menu are shown in the menu tree below. You can find an overview of the entire menu tree in the *FST installation and commissioning manual*.

Software version

The menu tree corresponds to that of software version V2.00a-0165.

Executions

Following the depiction of the menu tree, all menu items are described together with their functions and setting ranges.

For all menu items with adjustable numerical values, the value "0" corresponds to deactivation of the respective function.

HAUPTMENUE

- **Config** — Installation
  - S2-System
    - S2-Installation Mode ON
    - S2-Teach Mode ON
    - Pre Teach. Offset
      - Pre Teach. Offset [mm]
      - Bottom:EndSwitch:>400
      - Bottom:Insp.E/S:000
      - Top:EndSwitch:>200
      - Top:Insp.E/S:000
    - Teach-menu
      - Teach all
      - Teach bot.floor
      - Teach bot. E/S Pos
      - Teach bot. Insp.E/
      - Teach top floor
      - Teach top E/S Pos
      - Teach top Insp.E/S
      - Teach floor
      - Erase all S2 pos
    - S2 Test Funct
      - Test Excess Speed
      - Test speed limit
      - Test approach decel. VP
      - Test approach decel. EP
      - Test VA.system-Up
      - Test VA.System-Down
      - S2-Test UCM
      - Reset S2-Test
      - Open S2-SHK relay
      - Open S2-SBR relay
      - Test pipe break valve
    - Config DoorZone
    - Config Delay
    - Cfg. Trigger Speed
- **Kopierung**
  - Global
    - Global
    - Geber Typ :CAN-S2
    - Auflösung
    - Richtung

TESTMENUE

- Fault Reset
- S2-Fault Reset
- Doors-Lock
- Endswitch Test Top
- Endswitch Test Bot
- Buffer Test Up
- Buffer Test Down
- UCM-A3 Test Up
- UCM-A3 Test Down
- UCM-A3 Test Act.
- UCM-A3 Fault Reset
- Reset Insp. Pit

12.2 MAIN MENU - Configuration/Installation/S2-System

Menu item	Description	Setting range
Pre Teach. Offset - Pre Teach. Offset [mm]	Teach function with autostop function - Pre Teach. Offset [mm]	*)
Pre Teach. Offset - Bottom:EndSwitch:>400	Teach function with autostop function – Teach bottom end switch	*)
Pre Teach. Offset - Bottom:Insp.E/S:000	Teach function with autostop function – Teach bottom inspection end switch	*)
Pre Teach. Offset - Top:EndSwitch:>200	Teach function with autostop function – Teach top end switch	*)
Pre Teach. Offset - Top:Insp.E/S:000	Teach function with autostop function – Teach top inspection end switch	*)
Teach menu - Teach all	Specified sequence of the teach positions	*)
	*) This teach process is not yet available!	
Teach menu - Teach Bottom Floorr	Teach bottom floor	Confirm operational instructions with Enter
Teach menu - Teach Btm:E/S Pos.	Teach BOTTOM end switch	Confirm operational instructions with Enter
Teach menu - Teach Btm:Insp.E/S	Teach BOTTOM inspection end switch	Confirm operational instructions with Enter
Teach menu - Teach Top Floor	Teach top floor	Confirm operational instructions with Enter
Teach menu - Teach Top:E/S Pos.	Teach TOP end switch	Confirm operational instructions with Enter
Teach menu - Teach Top:Insp E/S	Teach TOP inspection end switch	Confirm operational instructions with Enter
Teach menu - Teach Floor	Direct teaching of the floors via the FST menu	NO / YES
Teach menu - Delete all S2-Pos	Deletes all taught floors when installation mode is activated, or ON --> OFF	NO / YES
S2 Test Funct - Test S2- Overspeed	Activation of the S2 test function	NO / YES
S2 Test Funct - Test S2 OSG Func.	Activation of the S2 test function	NO / YES
S2 Test Funct - Test Decel. VBuffer	Activation of the S2 test function	NO / YES
S2 Test Funct - Test Decl.RBuffer	Activation of the S2 test function	NO / YES
S2 Test Funct - Test Pre.Trig.top	Activation of the S2 test function	NO / YES
S2 Test Funct - Test Pre Trig.Botm	Activation of the S2 test function	NO / YES

Menu item	Description	Setting range
S2 Test Funct - Reset S2 Test	Reset of the S2 test function	NO / YES
S2 Test Funct - S2 Test UCM	Activation of the S2 test function	NO / YES
S2 Test Funct - Open S2-SHK relay	Direct activation of the SHK relay	NO / YES
S2 Test Funct - Open S2-SBR relay	Direct activation of the SBR relay	NO / YES
S2 Test Funct - Test Rupture valve	Test command for checking the rupture valve (*see 15.1 Rupture valve test instruction, page 203)*	NO / YES
Config DoorZone	Change of door zone length must be equal to half of the door cam length.	0-200mm
Config Deceleration	Change of delay constant with Code + Installation Mode ON	00000000-FFFFFFFF
Cfg. Trip-Speed	Change of trigger speed with Code + Installation Mode ON	00000000-FFFFFFFF

12.3 MAIN MENU - Positioning/Global

Menu item	Description	Setting range
Global - Encoder type	Type of shaft positioning system - Absolute positioning - Incremental positioning	>CAN-S2

12.4 TEST MENU

Menu item	Description
Fault Reset	Resets FST3 errors. (Not UCM and S2 errors)
Doors-LOCK	Locks the car door
End switch Test Top	Test function for the top end switch
End switch Test Bot	Test function for the bottom end switch
Buffer Test Up	Test function for the top set-down buffer **ATTENTION!** Car moves onto the buffer at nominal speed
Buffer Test Down	Test function for the bottom set-down buffer (hold down the ENTER button) **ATTENTION!** Car moves onto the buffer at nominal speed.
UCM-A3 Test Upw.	Test function for determining the UCM stopping distance in upward direction
UCM-A3 Test Downw.	Test function for determining the UCM stopping distance in downward direction
UCM-A3 test actuator	Test function of the UCM actuator. Automatically performs 10 test drives.
UCM-A3 Error Reset	Resets the UCM error
Reset Insp.SG	Resets the SG inspection
S2 error reset	Resets the S2 error

13 Event and error messages

The FST controller stores up to 100 event and error messages. These messages can be called up on the user interface of the FST (3 x Enter), with the mass memory or via remote data transmission at any time.

LC-Display

```
ERROR[00037/00040]
28.09 10:18:26
[012]
Door close failed
FLOOR: 03 V00 R01 I00
```

A
B
C
D

A	The 37th event/error of 40 registered
B	Date / Time / Message Code
C	Text description of event/error
D	Floor-generated signals / actual signals / information byte Infobyte1

13.1 Event messages

Code	Message	Description	Comment
128	COLDSTART	Restart of FST-3 controller	› FST-3 was switched off and on again on the fuse or the main switch › Power failure › All 4 arrow buttons were pressed simultaneously. › Menu item FST-Reset was performed.
129	INSPECTION-ON INSPECTION-OFF	Inspection work is being carried out.	The inspection changeover switch on the car roof is set to INSPECTION.
131	POWER LOST	Failure of the 24V power supply.	System was switched off or power supply defective.
132	REMOTE RESET	The FST-3 controller was reset by the GST group controller.	The FST-3 was reset through the serial interface.
133	CALIBRATION-START CALIBRATION-OK! CALIBRA-TION-ABORT!	Calibration progress is displayed.	A calibration drive was triggered.
134	LEARN DRIVE-START LEARN DRIVE-OK! LEARN DRIVE-ABORT!	Learn drive progress is displayed.	A learn drive was triggered.
135	SOFTWARE UPDATE	FST software update was performed via USB stick.	Action by user
136	EVACUATION-ON EVACUATION-OFF EVACUATION-OK	An evacuation drive was carried out.	The evacuation signal on a programmable input/output was active.

Code	Message	Description	Comment
137	DRIVE-SERIAL OK	DDCP interface X12 in operation.	The serial DCP-interface X11 between FST and frequency inverter was initialised without error (e.g. after being switched on).
138	MONITOR-SIG-NAL-ON MONITOR-SIG-NAL-OFF	State change at programmable input "Monitor"	The programmable input "Monitor" has changed its state. This input can be used to enter the status change of an arbitrary signal in the error list.
139	APRON OUT-ON APRON OUT-OFF	State change at input "Apron monitoring".	For very small shaft pits, the state of the electrically moni-tored apron is registered as a message in the error list.
140	ORIENTATION	Orientation drive during incre-mental positioning.	› Power failure for non-level car. › Serious inconsistency in magnet switch states TC, BC and Zone B.
141	BATTERY EMPTY	Voltage of lithium button cells dropped below < 2.58V.	Check the FST onboard lithium button cell for secure seating; otherwise replace.
142	AUXILIARY-ON AUXILIARY-OFF	Auxiliary control was switched on and off.	The auxiliary mode switch in the control cabinet was actuated.
143	FIREMAN MODE-ON FIREMAN MODE-OFF	Fire recall was switched on or off.	› Fire recall received at FST, RIO or ADM. › FIREMAN MODE-OFF is always displayed if fire-recall I/O ports are used (normally closed contacts).
144	ENCODER RE-ALIGNED	Toothed belt monitoring for absolute positioning: Automatic correction has occurred Positioning→Global→Enc. Belt Mon. = ON	If the read position of an upward drive from the bottom floor is different from the reference position of the zone signal. The shaft table was shifted accordingly.
145	LCS-DRIFT-AD-JUSTMENT	Load control system LCS auto-matically performed an empty load calibration. Config→Weight Sensor→LCS Settings→Auto-Adjust-ments→Drift Compensation = YES	A constant additional load in excess of 30 kg has been present in the car for more than 2 hours.
146	BLDG. AUTOM. STATUS	I/O-Port "GLT-signals" can be used to display changes for external signals in the event list of the FST. I/O-Port=000n34F2 n=0...9, A...F Placeholder n is registered in infobyte 1 of the event list.	Change of the signal status from inactive to active.

Code	Message	Description	Comment
147	ARREST TEST ACTIVATED	Message appears from the time of activation of the remote triggering of the speed limiter	Action triggered by user under TEST MENU/ FangTest-Automatik or FangTest-Sofort.
148	A3 ACTUATOR TEST OK!	The ten test drives for the function check of the self-monitoring with A3 actuators (e.g., holding brake or valves) were successfully completed. See "UCM-A3" manual	Action triggered by user under TEST MENU/UCM-A3 Test Aktor
149	Currently no function		
150	Currently no function		
151	Bypass switch ON Bypass switch OFF	The bypass switch has been switched to the normal, SP, FK or DT position in the control cabinet.	Action by the user using a triangular key

Message	Description
S2-SHK-RELAY OPEN	The "SHK relay" between terminal X630:8 and 12 of the S2 are de-energised. The power supply to the brake, motor, valves, etc. is interrupted. The reason for the interruption can be found in the guide menu under S2 monitor in the column "SHK".
S2-INSTALLATION MODE	The installation mode of the S2 was switched on through S52. 24 VDC is at terminal X630:5. A drive without magnetic tape or sensor is possible if no positions have previously been "taught". This mode is required for the teaching of the end switches, the inspection end switches and the end floors.
S2-TEACH MODE	The teach mode of the S2 was switched on through S50. 24 VDC is at terminals X630:6. A drive for "teaching" the floors is possible. Teach mode prevents normal operation, because the landing calls are blocked.
TEACH/INST. FAULT	Installation and teach mode are activated. Faulty operation → Only one of the two modes is possible!
HOLD FK RESET...	RESET (key) button S256 is actuated. 24 VDC is at terminal X631:2. The access monitoring for the car roof (FK) / shaft head (SK) is currently being reset. For a successful RESET, the input must be active for approx. 3 seconds. Press S256 until the display HOLD FK RESET... disappears.
RESET FK OK	RESET procedure for the resetting of the access monitoring for the car roof (FK) / shaft head (SK) successfully completed.
RESET FK Error	RESET procedure for the resetting of the access monitoring for the car roof (FK) / shaft head (SK) not successfully completed! RESET (key) button S256 actuated too briefly or too long. Press the button until the the message HOLD FK RESET... disappears from the display.
HOLD SG RESET...	RESET (key) button S256 is actuated. The access monitoring for the shaft pit (SG) is currently being reset. For a successful RESET, the input must be active for approx. 3 seconds. Press S256 until the display HOLD SG RESET... disappears.
RESET SG OK	RESET procedure for the resetting of the access monitoring for the shaft pit (SG) successfully completed.

RESET SG Error	RESET procedure for the resetting of the access monitoring for the shaft pit not successfully completed! RESET (key) button S256 actuated too briefly or too long. Press the button until the the message HOLD SG RESET... disappears from the display.
S2-ERR HOLD RESET	RESET button S51 is actuated. An S2 RESET is currently being performed. For a successful RESET, the input must be active for approx. 3 seconds. Press S51 until the display S2-ERR HOLD RESET disappears.
S2 ERR RESET OK	RESET procedure of the S2 successfully completed. Important! After an S2 RESET is performed, the resetting/activation of the access monitoring is required, even if this is not being used in the lift system! Therefore, S256, S256 or S207 must be actuated!
S2 ERR RESET ERROR	RESET procedure for the S2 RESET not successfully performed! RESET S51 button actuated too briefly or too long. Press the button until the message S2-ERR HOLD RESET... appears on the display.
SHK Open:Can_t Drive	S2 SHK RELAY OPEN is open – that is why the S2 is not ready for movement. The reason for the interruption can be found in the guide menu under S2 monitor in the column "SHK".
S2-COMMUNICAT. FAIL	CAN-BUS connection between FST and S2 interrupted. Check the plugs on the FST-3 (X10) and S2 (X10).
S2-EMERG. END SWITCH	The "emergency end switch" position has been reached. Direction is indicated with arrow UP or arrow DOWN. Error reset via FST test menu → Fault reset
S2-TAPE SW. ACTIVE	The tape switch has triggered. The magnetic tape is to be checked for correct fitting and presence. Operating the S2 / lift system without a functioning tape switch is prohibited! The error is not locking, but the tape switch itself is latching. Prior to a reset, a check of the tape, bracket, etc. must be performed.
S2-TEST START FAIL	Test of the start sequence failed. Perform an S2 reset. If errors persist, consult with the NEW LIFT service team.
S2 EXCESS SPEED TEST...	Manual triggering of the Over- speed test. see TEST Over-speed pre-triggering (115%), page 100
S2 SPEED LIMIT TEST...	Manual triggering of the speed limiter test. see TEST S2 speed limiter (125%), page 101
S2 DECEL. VP TEST...	Manual triggering of the test for the deceleration control circuit for the "virtual buffer" (VP). see Stage 1 procedure, page 102
S2 DECEL. RP TEST...	Manual triggering of the test for the deceleration control circuit for the "real buffer" (RP). see Stage 2 procedure, page 103
S2 PRETRIG TOP TEST...	Manual triggering of the test for the pre-triggered stopping system TOP. *see 9.5.13 Checking the pre-triggered stopping system protected space version (commissioning step 20), page 104*
S2 PRETRIG BOT TEST...	Manual triggering of the test for the pre-triggered stopping system BOTTOM. *see 9.5.13 Checking the pre-triggered stopping system protected space version (commissioning step 20), page 104*
S2 UCM TEST...	S2 UCM test running. *see 9.6.3 Checking unintended movements (UCM) (commissioning step 25), page 109*
IGNORE S2 EMERG STOP...	Manual triggering of a test command for the FST for ignoring drive abort commands of the S2. Required for tests on the rupture valves.
ERASE POSITIONS OK!	Deletion of the taught positions successfully completed. Configuration/Installation/S2-System/Teach menu/Erase all S2 pos. For deletion, installation mode must be activated; it must be switched off again for final storage.
ERASE POSITIONS ERR!	S52 not activated for the deletion.
INST/TEACH ON FAILED	The installation or teach switch was not activated for a menu action.

S2-CODE ACCEPTED	The configuration code for the trigger speed or deceleration constant was accepted.
S2-COMMAND WRONG	Consult with the NEW LIFT service team.
S2-CODE WRONG	The configuration code for the trigger speed or deceleration constant was not accepted.
S2-INSTAL.MODE OFF!	Installation mode must be active for the transmission of the configuration code; switch on S52.
Attention! S2 configuration for trigger speed missing! -> Configuration/ Installation/S2 system/Cfg. trigger speed/ XXXXXXXX Confirm the code with Enter!	This prompts the lift engineer to perform an action to configure the S2 for the trigger speed, *see Check the set speeds of the frequency inverter or similar with the system data.Setting and checking the safety parameters of the S2 system (commissioning step 3), page 73.*

13.2 Error messages

Code	Message	Description	Comment
0	NO ERROR		
1	NMI	Serious CPU error detected via the watchdog monitor through internal fault.	There is a possibility of a hardware error. In this case the circuit board must be replaced.
3	EMERGENCY STOP-ON EMERGENCY STOP-OFF	"ON" and "OFF" states of the emergency device that has triggered are displayed. Interruption of the safety circuit before terminal FST X14.7. All safety circuit inputs are de-energized.	Check the safety circuit inputs.
4	RESTART	Restart of the FST application	Message occurs after resetting with the four-button combination, Editor Data File Upload
5	DRIVE-BOOT	Error during start up of drive process.	Internal error
6	DRIVE-WATCHDOG	Major CPU error in drive process area determined by watchdog supervision.	Internal error
7	DRIVE-XFER	Error during transmission of data relevant for drive process.	Internal error
9	OPEN DOOR LOCK	Door contact open while the car is moving. Infobyte2: Safety circuit status: Bit 0 to 2: Not assigned Bit 3: Emergency stop Bit 4: Door contact C Bit 5: Door contact B Bit 6: Door contact A Bit 7: Door lock ("0" = interrupted, "1" = closed)	The safety circuit of the door circuit was interrupted while the car was moving. Whether the interruption was caused by a car door or shaft door is encoded in Infobyte2.

Code	Message	Description	Comment
10	MISSED TARGET	Upon arrival at the target floor, the programmed level position was exceeded or not reached	› Drive is not working accurately or is load dependent. › Increase crawl distance. › Carry out another calibration drive. › Check switch-off points prior to levelling.
11	DOOR OPEN FAILED	Car door does not open. › Infobyte2: 0 = door A 1 = door B 2 = door C › Infobyte 3: 1 = door still closed 2 = door partially open	› Check door drive. › Check wiring of the safety circuit. › Check operation of door relays on FSM. › Check operation of door end switches and jumpers FSM-2 J21, J31, J71, J81. › State of the safety circuit at the time of the error message is encoded in Infobyte 2.
12	DOOR CLOSE FAILED	Car door does not close. › Infobyte2: 0 = door A 1 = door B 2 = door C › Infobyte 3: » 1 = completely open, OPEN end switch is active » 2 = does not close completely, CLOSE end switch does not activate	› The car door is mechanically or electrically blocked. › Check operation of door relays on FSM. › Check operation of door end switches and jumpers FSM-2 J21, J31, J71, J81.
13	DOOR LOCK RETRY CNT	Error during closing of doors. › Infobyte2: 0 = door A 1 = door B 2 = door C The number of failed lock attempts is displayed under MAIN MENU / Doors / Doors-Basic / Lock fail.	The shaft door contact (lock) does not close even after n attempts.
14	DRM-START PROBLEM	The car does not start moving even with pre-selection active.	› Check pre-selection relay on FST › Check control contactors of main brake and valve › Check motor, brake and valves › Speed of car much too low during start Reset error with TEST MENU/Fault Reset.

Code	Message	Description	Comment
15	DRM–DRIVE MONITOR	Monitoring or drive error. No movement of the car could be determined during the drive. Reset TEST MENU / Fault Reset.	› The encoder position does not change even with pre-selection active. › The drive does not move. › No electric connection to encoder. › The encoder is faulty.
16	DRM–ENCODER FAILURE	Plausibility testing of car position with the encoder is faulty. Reset error with TEST MENU/ Fault Reset.	› The encoder is faulty. › Check electric connection of the encoder. › During commissioning, check direction of rotation of the encoder and execute Set floor 0. › Encoder value is outside of the shaft range. › Encoder unplugged or plugged in while controller switched on
17	DRM–CAR COMMS FAIL	Communication between the FST controller and the FSM-2 car top control module is faulty.	› Plug-in connections of the trailing ribbon cable are not plugged or are loose. › Line break in trailing ribbon cable. › Car top control module FSM-2 defective. › Check jumper settings JK1, JK2, JK3 on the car top control module. › Temporary short circuit on the car bus, cable, FPM, EAZ, etc.; see car bus topology
18	DRM–END FLOOR SPEED	Reset TEST MENU / Fault Reset.	The delay control circuit at the top and bottom end floors has triggered.
19	DRM–MISSING ZONE	No zone message available. Reset TEST MENU / Fault Reset.	› The car has reached a level position but does not receive a zone message from the safety device. › Check safety device and zone magnet switches.
20	DRM–BRAKE FAILURE	The brakes do not react or cannot be released. Reset TEST MENU / Fault Reset.	› The brake does not release even with pre-selection active. › The brake does not close even with the car stopped. Monitoring via input FST X1D.6, X1D.7.
21	DRM–MOTOR FAILURE	Temperature monitoring of the drive has triggered.	Motor overheated. Monitoring via input FST X1D.9
22	DRM–FORCED STOP	Input signal "Forced Stop" was active at a programmable input. The car is brought to a standstill with open door on the floor.	Refer to the order-specific wiring diagrams to determine which signal triggered the forced stop.

Code	Message	Description	Comment
23	DRM–EMERG.LIMIT SW	Overtravel of the lowest floor (cable lifts) or highest floor (hydraulic lifts) acc. to EN81. Reset TEST MENU / Fault Reset.	The lower or upper emergency end switch has triggered. The contact is queried by terminal FST X14.3 ("TC"). Or alternatively via I/O port 000000DA.
24	DRM–DOOR FAILURE	The car door cannot be moved. Reset TEST MENU – Fault Reset. See menu item DRM-Door.	In spite of active door control, the car door does not move; the control stops the lift.
25	DRM CONTACTOR MONIT.	Contactor monitoring has triggered.	Terminal FST X1D.10 must be supplied with 24V while at a standstill. Check circuit according to the wiring diagram. If necessary, increase parameter contactor monitoring time.
26	DRM-SPECIAL I/O-PORT	The special function monitored by a programmed input "Special I/O-Port" has failed.	One of the terminals X1C.00 ... X1C.07 is occupied with function "Special I/O port" (see wiring diagram). Check the switching sequence of this input. This is generally the contact of the speed-limiter anti-creep device or auxiliary brake.
27	SLIP OUTSIDE LEVEL	Unexpected car movement out of the stopping position.	Car moves outside of the level range due to heavy loading or unloading. The Positioning/Floor/Level UP/DOWN level edges are set too small due to Ve that is calibrated too small.
28	SLIP OUTSIDE ZONE	Unexpected car movement out of the zone.	Car moves outside of the zone range.
29	DRIVE: CHKSUM-ERROR	Error during transmission of drive data from/to drive processor	Internal error
30	BUS-I/F TIMEOUT	Fault in LON-bus interface.	Internal error
31	START–ABORT	Drive start sequence cancelled.	The drive cannot be started. No return signals from drive or signals delayed: › See FST X1D.6, X1D.7 Feedback from brake › See wiring diagram › See Drive / Brake delay
32	STOP-ABORT	Drive stop sequence cancelled.	The drive cannot be stopped. No return signals from drive or signals delayed: › See FST X1D.6, X1D.7 Feedback from brake › See "Brake delay"
33	RE-LEVELLING ABORT	An error has occurred during re-levelling and the re-levelling process was cancelled.	› Check drive and pre-selection. › See Doors / Doors basic/ Byp-off delay

Code	Message	Description	Comment
34	BYPASS FAILURE	Safety circuit bypass not available despite zone message.	› Check wiring of the safety circuit. › See Doors / Doors basic/ Byp-off delay
35	DOOR LOCK TIMEOUT	The set door lock timeout is not long enough.	The car door is closed but the lock contact has not closed in the specified time. › Perform mechanical check of shaft doors (smooth running). › Check door lock contacts. › Increase door lock timeout (see Doors / Doors basic/ Door lock timeout).
36	CAR LIGHT FAILURE	Sensor on FSM-2 reports defective car lighting.	Check car lighting. Check sensor on FSM-2 (jumper J112).
37	REGULATOR ERROR-	Error message from frequency inverter when using serially controlled inverters.	Check error list of the frequency inverter. The number of the regulator error corresponds to the error code in the documentation of the frequency inverter.
38	REFILL PUMP TIMEOUT	Error during refilling of the hydraulic counterweight.	The cut-off pressure for refilling was not reached after 30 sec. Check function and control of the refill valve.
39	SAFETY CURTAIN BRK.	The safety curtain was interrupted while the car was moving.	Check unction and activation of the safety curtain (see Doors / Doors basic/ Light curtain).
40	SAFETY CURTAIN FAIL	Error during test of safety curtain.	The FST controller outputs a test signal to the FSM-2 X7 or X9 for the safety curtain prior to each drive. The safety curtain acknowledges the test signal with an interruption of the safety circuit. › Check operation of the safety curtain test. › Check length of test impulse under MAIN MENU - Doors - Doors Basic - Safety Curtain Fail (see Doors / Doors Basic / Safety Curtain Fail)
41	DRIVE-SERIAL OFF	No serial connection to the frequency inverter (FST X11, DCP)	› Check connection cable between FST X11 and frequency inverter. › Check settings in frequency inverter (DCP03).
42	DRIVE-SERIAL BAD	Serial connection to the frequency inverter is faulty (FST X11, DCP)	› Check connection cable between FST X11 and frequency inverter. › Check shielding of connection cable.

Code	Message	Description	Comment
43	UPS FAILURE-OFF UPS FAILURE-ON	State change at programmable input "UPS FAILURE" for monitoring a UPS error message	Check function of the UPS.
44	APRON CONTACT FAIL	The apron cannot be folded in.	Check mechanics, contact or I/O port with setting 000014F2.
45	EMERG.HALT TEST FAIL	The emergency stop test for inclined lifts has failed.	
46	UNEXPECTED STOP	Error in DCP communication between FST and frequency inverter.	Error in frequency inverter, DCP cable or FST. Or EMC problems caused by faulty motor brake resistor or DCP cable shielding and connection.
47	ASV ERROR-	Error in controlling the pawl-control.	Check signal interface of the pawl-control (see system description of the pawl-control).
48	MOTOR-ROOM OVERHEAT	The thermostat in the motor room has triggered (temperature > 40 °C).	Monitoring via terminal FST X1D.3.
49	REVISION TOO FAST	Inspection speed or auxiliary speed over 800 mm/s.	Check drive speeds and shaft positioning.
50	FAST-START DOOR SW.	The quick start door "almost closed" switch closed too early.	Check door switch
51	DRM-ZONE BRIDGED	No movement was detected in the door zone switch during the last drive.	Door zone switches A and B are permanently connected to 24 V.
52	SAFETY CCT BRIDGED	During the last arrival and door opening, the safety circuit did not open.	Check door lock/door switch safety circuit.
53	DRM-CMM FAILURE	"Critical Module Monitoring" does not receive feedback from one of the modules.	The list number of the missing module is in the info byte. This can be displayed in Show-LON-Modules.
54	DRM-BELT SLIPPAGE	Toothed belt monitoring has triggered. The toothed belt has slipped more than 100 mm.	› Check tension of toothed belt. › Check toothed belt and wheel for dirt deposits.
55	WRONG ENCODER DIR.	During a learn or calibration drive: Encoder position moves against the controlled direction.	› Positioning / Global / Direction to other direction. › Check connections from the drive
56	DRM-AUXILIARY BRAKE	Error at auxiliary brake monitoring contact.	› Check monitoring contacts › Extend / Drive / Aux. Brake Max Time.
57	DRM-RELEVEL. TIMEOUT	The maximum allowed re-levelling time of 60 sec. has been exceeded.	Check drive.
58	ROPE-TENSION-ERROR	Input port signal contact has triggered.	Input port is only used for signalling.
59	LCS DATA MISSING	FST does not receive load measurement from LCS.	Check LCS and, if applicable, jumper on LCS.

Code	Message	Description	Comment
60	DRM LITHIUM BATTERY	Voltage of lithium button cells dropped below < 2.58V. This message, which can be individually set by the user, must be enabled with MISCEL-9=01000000. This message results in the installation being shut down!	Check the FST onboard lithium button cell for secure seating; otherwise replace. See also event message 141 BATTERY EMPTY. Both messages are caused by insufficient lithium battery voltage.
61	DRM PROGRAMMABLE 1	Freely programmable error message under System/Factory Menu/DRM-Program1:Texts Triggered via an I/O port	Check the signal on an I/O port or the set function under Config/I/O Configuration/I/O Ports with value XXXX39F2 X= custom value
62	DRM-PROGRAMMABLE 2	Freely programmable error message under System/Factory Menu/DRM-Program2:Texts Triggered via an I/O port	Check the signal on an I/O port or the set function under Config/I/O Configuration/I/O Ports with value XXX139F2 X= custom value
63	DRM-PROGRAMMABLE 3	Freely programmable error message under System/Factory Menu/DRM-Program3:Texts triggered via an I/O port	Check the signal on an I/O port or the set function under Config/I/O Configuration/I/O Ports with value XXX239F2 X= custom value
64	DRM-DRIVE ERROR	The monitoring contact of the drive (X1.21 NC) has switched on. By default, the regulator fault alarm contact (inverter or similar) is connected here.	Check regulator. If no regulator error message contact is connected, the monitoring function must be deactivated (Drive / Drive monitor=NO)
65	PRE-SELECTION RELAY ERROR	Current measurement of the coils of the K0-K12 pre-selection relay faulty.	Check relay K0-K12 or the used relay (depending on drive types) for secure seating; otherwise replace because coil is defective
66	DRM UCM-A3 ERROR	Detection of an uncontrolled car movement with open door! This message appears depending on the door position and car speed and position. Possible serious error in the drive, hydraulic unit, regulation and/or control area! See also the "UCM-A3" manual.	With an open door, car has › exceeded the UCM-A3 zone, UCM-A3 zone = zone range of magnet switch S27/28 › or, within the UCM-A3 zone, exceeded the speed of 0.2m/s for 102ms from standstill, › or › the drive-brake or valve system is to be checked for errors.

Code	Message	Description	Comment
67	DRM A3-DRIVE ERROR	The feedback from the monitoring contacts of the actuator (e.g., holding brake or valve) is faulty. Error can only be reset with TEST MENU/UCM-A3 Fehl.Reset! See also the "UCM-A3" manual.	Signal sequence at terminals FST X1:19 and X1:20 is incorrect. Actuator or feedback contacts are faulty.
68	DRM ANTI-CREEP DEVICE	The response (check during start and stop of the drive) from the anti-creep device on I/O port 00003FF2 "Terminal open" is exceeded after 3 seconds of activation or 000040F2 "error message at clamping fixture". Error results in opening of the door and blocking of the lift.	Check signal sequence on the ports. Clamping fixture or feedback contacts are faulty. Fault alarm contact of anti-creep device tripped.
69	DRM INSP.END SWITCH	Optional monitoring of the mechanical inspection end switches through I/O port 000142F2 for TC or 000042F2 BC floor tripped.	Check signal sequence on the ports. Switching cam or feedback contacts are faulty or do not switch in the defined range. Defined range TC = from middle of next-to-last to last floor. BC = analogous to TC.
71	DRM anti creep device	Activation or release of the anti creep device magnet not within the monitoring time.	Check anti creep device magnet or contact for proper function or adapt the monitoring time if necessary.

102	S2-COMMUNICAT. FAIL	Communication to the S2 interrupted	CAN connection interrupted or S2 is offline
S000	S2-ERR.	General S2 error message	After restarting or RESET of S2/FST if an S2 error was previously pending. Even before the restart/RESET, the S2 sends the detailed error message and is now in a general error block. A detailed error display (last S2 error) can be read out in the FST error list.
S001	S2-ERR.UCM-A3 01	Uncontrolled movement with an open door	See LOG data ID1 0-3 Car has moved beyond the door zone with bridged doors.
S001	S2-ERR.UCM-A3 02	Uncontrolled movement with an open door	Car has moved too fast (0.800000 m/s) with bridged doors.
S001	S2-ERR.UCM-A3 06	Uncontrolled movement with an open door	Car has moved inside the door zone too fast (0.700000 m/s) with an open SHK.
S001	S2-ERR.UCM-A3 09	Uncontrolled movement with an open door	Car has moved beyond the door zone with bridged doors during approach.
S001	S2-ERR.UCM-A3 0A	Uncontrolled movement with an open door	Car has moved too fast (1.200000 m/s) with bridged doors in the door zone during approach.

S001	S2-ERR.UCM-A3 0E	Uncontrolled movement with an open door	Car has moved inside the door zone too fast (1.100000 m/s) with an open SHK during approach.
S002	S2-ERR.ACCEL.	Acceleration too fast	Check drive parameters and/or activation Car free fall was detected. Acceleration at trigger: 6.500000 m/s^2
S003	S2-ERR.SPEED	Over-speed detected / SHK and SBR opened	Speed was greater than trigger speed Speed at trigger: 1.250000 m/s
S004	S2-ERR.TRACTION 01	Loss of traction / SHK and SBR opened	Car does not brake while safety circuit is open
S004	S2-ERR.TRACTION 02	Loss of traction / SHK and SBR opened	Car moves away from stop point with safety circuit open
S005	S2-ERR.DIR.CONT	Direction monitoring triggered / SHK and SBR opened	Car inspection UP pressed, but car moves downwards. Please check wiring!
S005	S2-ERR.DIR.CONT	Direction monitoring triggered / SHK and SBR opened	Car inspection DOWN pressed, but car moves upwards. Please check wiring!
S005	S2-ERR.DIR.CONT	Direction monitoring triggered / SHK and SBR opened	Shaft pit inspection UP pressed, but car moves downwards. Please check wiring!
S005	S2-ERR.DIR.CONT	Direction monitoring triggered / SHK and SBR opened	Shaft pit inspection DOWN pressed, but car moves upwards. Please check wiring!
S005	S2-ERR.DIR.CONT	Direction monitoring triggered / SHK and SBR opened	Auxiliary mode UP pressed, but car moves downwards. Please check wiring!
S005	S2-ERR.DIR.CONT	Direction monitoring triggered / SHK and SBR opened	Auxiliary mode DOWN pressed, but car moves upwards. Please check wiring!
S006	S2-ERR.VA	Pre-triggered stopping system has triggered / SHK and SBR opened	Car located more than 10 cm below the bottom inspection end switch Trigger position: 0.000000 m
S006	S2-ERR.VA	Pre-triggered stopping system has triggered / SHK and SBR opened	Car located more than 10 cm above the top inspection end switch Trigger position: 35.800000 m
S010	S2-ERR.SBR-SBRFB	Error when checking the SBR feedback / SHK and SBR opened	Check contact / actuator – coil The feedback circuit of the safety brake does not correspond with the control. Trigger position: 0.000000 m
S020	S2-ERR.SH.HEAD	Plausibility check for parameter and shaft table failed	Position of top shaft end switch should be higher than position of bottom shaft end switch.
S020	S2-ERR.SH.HEAD	Plausibility check for parameter and shaft table failed	Position of top inspection end switch should be higher than position of bottom inspection end switch.
S020	S2-ERR.SH.HEAD	Plausibility check for parameter and shaft table failed	Position of top shaft end switch should be higher than position of top inspection end switch.

S020	S2-ERR.SH.HEAD	Plausibility check for parameter and shaft table failed	Position of bottom shaft end switch should be lower than position of bottom inspection end switch.
S020	S2-ERR.SH.HEAD	Plausibility check for parameter and shaft table failed	Position of top inspection end switch should be lower than position of top end floor.
S020	S2-ERR.SH.HEAD	Plausibility check for parameter and shaft table failed	Position of bottom inspection end switch should be higher than position of bottom end floor.
S020	S2-ERR.SH.HEAD	Plausibility check for parameter and shaft table failed	Positions in the floor table should be lower than the position of the top shaft end switch.
S020	S2-ERR.SH.HEAD	Plausibility check for parameter and shaft table failed	Positions in the floor table should be higher than the position of the bottom shaft end switch.
S020	S2-ERR.SH.HEAD	Plausibility check for parameter and shaft table failed	Positions in the floor table should be in ascending order.
S020	S2-ERR.SH.HEAD	Plausibility check for parameter and shaft table failed	Trigger speed should be lower than or equal to the permitted maximum value (10 m/s).
S020	S2-ERR.SH.HEAD	Plausibility check for parameter and shaft table failed	Maximum deceleration at the shaft end should be within the permitted range (0.1 m/s^2 ... 2 m/s^2).
S020	S2-ERR.SH.HEAD	Plausibility check for parameter and shaft table failed	Global door zone width should be lower than or equal to the permitted maximum value (200 mm).
S020	S2-ERR.SH.HEAD	Plausibility check for parameter and shaft table failed	The floor number should be less than the maximum permitted floors.
S020	S2-ERR.SH.HEAD	Plausibility check for parameter and shaft table failed	Internal error. Consult with the NEW LIFT service team.
S021	S2-ERR.L1->L2	Car was stopped due to level 1 error / SHK opened	A level 1 error has occurred and the car is now stopped at the floor. Trigger position: 0.000000 m
S022	S2-ERR.CMD-SYNTAX	Syntax check for command failed	Command: unknown Consult with the NEW LIFT service team.
S023	S2-ERR.CMD-DATA	Plausibility check for command failed	Command: door bypass Consult with the NEW LIFT service team.
S023	S2-ERR.CMD-DATA	Plausibility check for command failed	Command: zone enabling Consult with the NEW LIFT service team.
S023	S2-ERR.CMD-DATA	Plausibility check for command failed	Command: teach Consult with the NEW LIFT service team.
S023	S2-ERR.CMD-DATA	Plausibility check for command failed	Command: door zone width configuration Consult with the NEW LIFT service team.

S023	S2-ERR.CMD-DATA	Plausibility check for command failed	Command: configuration of the deceleration at the shaft end Consult with the NEW LIFT service team.
S023	S2-ERR.CMD-DATA	Plausibility check for command failed	Command: trigger speed configuration Consult with the NEW LIFT service team.
S023	S2-ERR.CMD-DATA	Plausibility check for command failed	Command: manual opening of the relay outputs Consult with the NEW LIFT service team.
S023	S2-ERR.CMD-DATA	Plausibility check for command failed	Command: commissioning Consult with the NEW LIFT service team.
S023	S2-ERR.CMD-DATA	Plausibility check for command failed	Command: save S2 configuration Consult with the NEW LIFT service team.
S023	S2-ERR.CMD-DATA	Plausibility check for command failed	Command: transfer S2 configuration Consult with the NEW LIFT service team.
S023	S2-ERR.CMD-DATA	Plausibility check for command failed	Command: unknown Consult with the NEW LIFT service team.
S030	S2-ERR.HW1 DEFECT	Minor hardware defect (level 1)	Car is brought to a standstill at the next stop. Consult with the NEW LIFT service team.
S031	S2-ERR.HW2 DEFECT	Medium-severity hardware defect (level 2)	SHK was opened Consult with the NEW LIFT service team.
S032	S2-ERR HW3 DEFECT	Major hardware defect (level 3)	SHK and SBR were opened Consult with the NEW LIFT service team.
S033	S2-ERR.IO 01	Test of the 24-V inputs failed / SHK and SBR opened	One or more inputs did not deliver the expected value (0): - (IN00) error reset, reset of safety functions
S033	S2-ERR.IO 02	Test of the 24-V inputs failed / SHK and SBR opened	One or more inputs did not deliver the expected value (0): - (IN01) Feedback input of the safety brake
S033	S2-ERR.IO 54	Test of the 24-V inputs failed / SHK and SBR opened	One or more inputs did not deliver the expected value (0): - (IN02) Tape switch - (IN04) Teach mode - (IN06) Auxiliary mode up - (IN08) Car inspection (inverted) - (IN10) Car inspection down - (IN12) Car folding support normal operation - (IN14) Car roof access contact (triangular) - (IN16) Shaft pit inspection (inverted)

S033	S2-ERR.IO A8	Test of the 24-V inputs failed / SHK and SBR opened	One or more inputs did not deliver the expected value (0): - (IN03) Installation mode - (IN05) Auxiliary mode (inverted) - (IN07) Auxiliary mode down - (IN09) Car inspection up - (IN11) Car inspection fast - (IN13) Car folding support inspec-tion operation - (IN15) Reset access car roof - (IN17) Shaft pit inspection up
S033	S2-ERR.IO 00	Test of the 24-V inputs failed / SHK and SBR opened	One or more inputs did not deliver the expected value (0): - (IN18) Shaft pit inspection down - (IN19) Shaft pit inspection fast - (IN20) Shaft pit folding support normal operation - (IN21) Shaft pit folding support inspection operation - (IN22) Shaft pit access contact (triangular) - (IN23) Reset access shaft pit - (IN24) Operating voltage OK (mains operation)
S033	S2-ERR.IO 00	Test of the 24-V inputs failed / SHK and SBR opened	One or more inputs did not deliver the expected value (0): - (IN26) Reset state access control
S033	S2-ERR.IO 00	Test of the 24-V inputs failed / SHK and SBR opened	One or more inputs did not deliver the expected value (0): - (IN27) Input not used
S034	S2-ERR.RAM-TEST	RAM test failed / SHK and SBR opened	Device must be replaced. Consult with the NEW LIFT service team.
S035	S2-ERR.VCC-TEST	VCC test failed / SHK and SBR opened	Voltage too low – test path HIGH Device must be replaced. Consult with the NEW LIFT service team.
S035	S2-ERR.VCC-TEST	VCC test failed / SHK and SBR opened	Voltage too high – test path HIGH Device must be replaced. Consult with the NEW LIFT service team.
S035	S2-ERR.VCC-TEST	VCC test failed / SHK and SBR opened	Voltage too low – test path LOW Device must be replaced. Consult with the NEW LIFT service team.
S035	S2-ERR.VCC-TEST	VCC test failed / SHK and SBR opened	Voltage too high – test path LOW Device must be replaced. Consult with the NEW LIFT service team.
S036	S2-ERR.REL. FB.-CONT	Relay test failed / SHK and SBR opened	The positively driven feedback contacts of the safety relay for the safety circuit do not correspond with the control. Device must be replaced. Consult with the NEW LIFT service team.

S036	S2-ERR.REL. FB.-CONT	Relay test failed / SHK and SBR opened	The positively driven feedback contacts of the safety relay for the auxiliary mode bypass do not correspond with the control. Device must be replaced. Consult with the NEW LIFT service team.
S036	S2-ERR.REL. FB.-CONT	Relay test failed / SHK and SBR opened	The positively driven feedback contacts of the safety relay for the door bypass do not correspond with the control. Device must be replaced. Consult with the NEW LIFT service team.
S036	S2-ERR.REL. FB.-CONT	Relay test failed / SHK and SBR opened	The positively driven feedback contacts of the safety relay for the safety brake do not correspond with the control. Device must be replaced. Consult with the NEW LIFT service team.
S036	S2-ERR.REL. FB.-CONT	Relay test failed / SHK and SBR opened	Unknown error Device must be replaced. Consult with the NEW LIFT service team.
S037	S2-ERR.ROM-TEST	ROM test failed / SHK and SBR opened	Device must be replaced. Consult with the NEW LIFT service team.
S038	S2-ERR.T2-RELAY 01	T2 test interval for relay not complied with / car will be brought to a standstill at the next stop	Diagnostics interval (T2) for the safety relays of the safety circuit was not complied with – positive opening of the relays was performed. Device must be replaced. Consult with the NEW LIFT service team.
S038	S2-ERR.T2-RELAY 02	T2 test interval for relay not complied with / car will be brought to a standstill at the next stop	Diagnostics interval (T2) for the safety relays of the auxiliary mode bypass was not complied with – positive opening of the relays was performed. Device must be replaced. Consult with the NEW LIFT service team.
S038	S2-ERR.T2-RELAY 03	T2 test interval for relay not complied with / car will be brought to a standstill at the next stop	Diagnostics interval (T2) for the safety relays of the door bypass was not complied with – positive opening of the relays was performed. Device must be replaced. Consult with the NEW LIFT service team.
S038	S2-ERR.T2-RELAY 04	T2 test interval for relay not complied with / car will be brought to a standstill at the next stop	Diagnostics interval (T2) for the safety relays of the safety brake was not complied with – positive opening of the relays was performed. Device must be replaced. Consult with the NEW LIFT service team.
S038	S2-ERR.T2-RELAY 00	T2 test interval for relay not complied with / car will be brought to a standstill at the next stop	Unknown error Device must be replaced. Consult with the NEW LIFT service team.

S040	S2-ERR.SIN1	Minor EMC interference level 1 / Car will be brought to a standstill at the next stop	The signal of the voltage supply of the safety circuit is faulty. Measured pulse: 350
S041	S2-ERR.SIN2	Medium-severity EMC interference level 2 / SHK was opened	The signal of the voltage supply of the safety circuit is faulty. Measured pulse: 400
S042	S2-ERR.SIN3	Major EMC interference level 3 / SHK and SBR opened	The signal of the voltage supply of the safety circuit is faulty. Measured pulse: 450
S050	S2-ERR.I2C-COMM	Internal error	Consult with the NEW LIFT service team.
S051	S2-ERR.EPROM-CRC	Internal error	Consult with the NEW LIFT service team.
S052	S2-ERR.EEP-WRITE	Internal error	Consult with the NEW LIFT service team.
S053	S2-ERR.EEP-READ	Internal error	Consult with the NEW LIFT service team.
S060	S2-ERR.S/N	Serial numbers of the two controllers are different	Serial number channel B: 000123 Consult with the NEW LIFT service team.
S061	S2-ERR.CRC	CRCs of the two controllers are different	CRC value channel B: 0x1A2B3C4D Consult with the NEW LIFT service team.
S062	S2-ERR.CMP-INPUT	Input data of the two controllers is different	Input with discrepancy: - (IN00) error reset, reset of safety functions Consult with the NEW LIFT service team.
S062	S2-ERR.CMP-INPUT	Input data of the two controllers is different	Input with discrepancy: - (IN11) Car inspection fast Consult with the NEW LIFT service team.
S062	S2-ERR.CMP-INPUT	Input data of the two controllers is different	Input with discrepancy: - (IN26) Reset state access control Consult with the NEW LIFT service team.
S062	S2-ERR.CMP-INPUT	Input data of the two controllers is different	Input with discrepancy: - (IN27) Invalid value Consult with the NEW LIFT service team.
S062	S2-ERR.CMP-INPUT	Input data of the two controllers is different	Input with discrepancy: - (IN28) Safety circuit query SHK END Consult with the NEW LIFT service team.
S062	S2-ERR.CMP-INPUT	Input data of the two controllers is different	Input with discrepancy: - (IN33) Position Consult with the NEW LIFT service team.

S062	S2-ERR.CMP-INPUT	Input data of the two controllers is different	Input with discrepancy: - (IN34) Speed Consult with the NEW LIFT service team.
S062	S2-ERR.CMP-INPUT	Input data of the two controllers is different	Input with discrepancy: - (IN35) Acceleration Consult with the NEW LIFT service team.
S062	S2-ERR.CMP-INPUT	Input data of the two controllers is different	Input with discrepancy: - (IN36) Flags & modes Consult with the NEW LIFT service team.
S062	S2-ERR.CMP-INPUT	Input data of the two controllers is different	Input with discrepancy: - (IN37) Invalid value Consult with the NEW LIFT service team.
S062	S2-ERR.CMP-INPUT	Input data of the two controllers is different	Input with discrepancy: - (IN38) Door bypass command Consult with the NEW LIFT service team.
S062	S2-ERR.CMP-INPUT	Input data of the two controllers is different	Input with discrepancy: - (IN39) Zone enabling command Consult with the NEW LIFT service team.
S062	S2-ERR.CMP-INPUT	Input data of the two controllers is different	Input with discrepancy: - (IN40) Teach command Consult with the NEW LIFT service team.
S062	S2-ERR.CMP-INPUT	Input data of the two controllers is different	Input with discrepancy: - (IN41) Door zone width configuration Consult with the NEW LIFT service team.
S062	S2-ERR.CMP-INPUT	Input data of the two controllers is different	Input with discrepancy: - (IN42) Deceleration at the shaft end Consult with the NEW LIFT service team.
S062	S2-ERR.CMP-INPUT	Input data of the two controllers is different	Input with discrepancy: - (IN43) Trigger speed Consult with the NEW LIFT service team.
S062	S2-ERR.CMP-INPUT	Input data of the two controllers is different	Input with discrepancy: - (IN44) Opening the relays Consult with the NEW LIFT service team.
S062	S2-ERR.CMP-INPUT	Input data of the two controllers is different	Input with discrepancy: - (IN45) Commissioning command Consult with the NEW LIFT service team.
S062	S2-ERR.CMP-INPUT	Input data of the two controllers is different	Input with discrepancy: - (IN46) Save configuration Consult with the NEW LIFT service team.

S062	S2-ERR.CMP-INPUT	Input data of the two controllers is different	Input with discrepancy: - (IN47) Transmit configuration Consult with the NEW LIFT service team.
S062	S2-ERR.CMP-INPUT	Input data of the two controllers is different	Input with discrepancy: - (IN48) Invalid value Consult with the NEW LIFT service team.
S063	S2-ERR.SYNC-CONTR	Both controllers not running synchronously	Consult with the NEW LIFT service team.
S064	S2-ERR.PAK	Internal error	Consult with the NEW LIFT service team.
S065	S2-ERR.PK0	Internal error	Consult with the NEW LIFT service team.
S066	S2-ERR.PK1	Internal error	Consult with the NEW LIFT service team.
S067	S2-ERR.COMM.T/O	Internal error	Consult with the NEW LIFT service team.
S068	S2-ERR.CMP-HEAD	Internal error	Consult with the NEW LIFT service team.
S069	S2-ERR. CMP-OUTDATA	Internal error	Consult with the NEW LIFT service team.
S070	S2-ERR.INV.STATE	Internal error	Consult with the NEW LIFT service team.
S071	S2-ERR.INV.INDEX	Internal error	Consult with the NEW LIFT service team.
S072	S2-ERR.STACK L1	Internal error	Consult with the NEW LIFT service team.
S073	S2-ERR.STACK L2	Internal error	Consult with the NEW LIFT service team.
S074	S2-ERR.STACK L3	Internal error	Consult with the NEW LIFT service team.
S075	S2-ERR.T/O	Internal error	Consult with the NEW LIFT service team.
S076	S2-ERR.MAINLOOP	Internal error	Consult with the NEW LIFT service team.
S077	S2-ERR.ERASE	Internal error	Consult with the NEW LIFT service team.
S078	S2-ERR.C→IDX	Internal error	Consult with the NEW LIFT service team.
S079	S2-ERR.CN→GET→OB	Internal error	Consult with the NEW LIFT service team.
S080	S2-ERR.CN→SET→OB	Internal error	Consult with the NEW LIFT service team.
S081	S2-ERR.INPUTDATA	Error during plausibility check of the input data	Reason unknown
S081	S2-ERR.INPUTDATA	Error during plausibility check of the input data	Value for the access configuration (IN26) changed after start
S081	S2-ERR.INPUTDATA	Error during plausibility check of the input data	Auxiliary mode UP or DOWN active, but auxiliary mode not ON

S081	S2-ERR.INPUTDATA	Error during plausibility check of the input data	Car inspection UP or DOWN active, but car inspection not ON
S081	S2-ERR.INPUTDATA	Error during plausibility check of the input data	Shaft pit inspection UP or DOWN active, but shaft pit inspection not ON
S090	S2-ERR.WDG	Internal error	Consult with the NEW LIFT service team.
S091	S2-ERR.USG	Internal error	Consult with the NEW LIFT service team.
S092	S2-ERR.NUL	Internal error	Consult with the NEW LIFT service team.
S093	S2-ERR.DEF	Internal error	Consult with the NEW LIFT service team.
S094	S2-ERR.UNG	Internal error	Consult with the NEW LIFT service team.
S095	S2-ERR.BUS	Internal error	Consult with the NEW LIFT service team.
S096	S2-ERR.MM	Internal error	Consult with the NEW LIFT service team.
S097	S2-ERR.HRD	Internal error	Consult with the NEW LIFT service team.
S200	S2-ERR.DECEL	Test abort of the deceleration monitoring	Top or bottom end floor is not taught Check drive parameters and drive
S200	S2-ERR.DECEL	Test abort of the deceleration monitoring	Position of the top end floor is below the position of the bottom end floor Check drive parameters and drive
S200	S2-ERR.DECEL	Test abort of the deceleration monitoring	Negative position values for top or bottom virtual end floor Check drive parameters and drive
S200	S2-ERR.DECEL	Test abort of the deceleration monitoring	Position of the top virtual end floor is below the position of the bottom virtual end floor Check drive parameters and drive

14 Further explanations

14.1 Setting the trigger speed

The nominal speed or the electrical/arrest trigger speed as per the standard (see EN 81-20, 5.6.2.2.1) represents a critical parameter that has to be monitored by the manufacturer of a speed limiter as part of the manufacturing process. The manufacturer must confirm the proper functioning of the device in the declaration of conformity

The following specifications must be implemented:

› The adjustment may only be performed by competent personnel. Installation mode may only be activated by an lift engineer who has been prepared for the task through appropriate training. Training ensures that they are aware of the risks involved with adjustment of the trigger speed.

› The adjustment must be documented. The adjustment is only possible with the aid of the NEW service team: the customer gives the device type "S2", the serial number and the new setting of the device to a NEW service team employee over the telephone. The employee will then generate an enabling code and provide this to the customer over the phone. The customer enters the enabling code in the FST menu. It is then transmitted to the safety system, which implements the adjustment of the parameter to the new trigger speed. Switching off installation mode causes the change to be permanently stored in the EEPROM. The adjustment is documented by the NEW service team employee and by the lift engineer on site.

› Sealing: adjustment must not be possible without destroying the seal

› (EN 81-20, 5.6.2.2.1.5). This is ensured in that the setting of the speed in the EEPROM of the safety system is permanently saved through two channels. A destruction of the "seal" without authorised access (installation mode and valid enabling code) is not possible.

› The new setting must be tested. At the end of the installation mode, the trigger speed can be temporarily reduced to half via a command in the FST menu. A drive at nominal speed must then be performed so that the safety function Over-speed decelerates the car at half trigger speed. Thereby, the lift engineer can test the trigger itself and can also check the trigger speed. This test is documented by the lift engineer on site.

› On the type plate it states that the set trigger speed can be read from the device. Within the course of type testing, it is ensured that the safety brake triggers at the set trigger speed. This is guaranteed within the declaration of conformity.

› Regular checking. In any case, the safety gear (with reduced speed) must be checked during the regular checks. The *check trigger speed* test step (*see 9.5.11 Checking the trigger speed (commissioning step 18), page 100*) is to be integrated into this check. In addition to this, the tester should check the set trigger speed in the S2 system via the FST.

14.2 Shortened buffers at shaft end

If the buffers at the end of the shaft are not designed for the nominal speed (EN 81-20, 5.8.2.2.2), a deceleration control circuit (EN 81-20, 5.12.1.3) must ensure that the normal deceleration is active prior to approaching the end floors. If the normal deceleration is not active, the drive brake must reduce the speed of the car to buffer speed before it hits the buffer.

It must be demonstrated that there is sufficient traction to decelerate the car to buffer speed (EN 81-20, 5.5.3 b). The traction test is described in EN 81-20, 6.3.3.

According to the standard (EN 81-20, 5.8.2.2), shortened buffers are only permitted from a nominal speed of 2.5 m/s. The buffers must then be designed for this speed. The buffer speed may need to be reduced further (see [S2.1], section "Reduction of the shaft end buffer speed"). If the buffers are configured for a speed of ≤ 2.5 m/s, the following safety functions are obligatory:

- Monitoring the auxiliary speed
- Acceleration monitoring

Furthermore, it must be ensured that the buffer speed is not exceeded in the event of an emergency

evacuation. A corresponding procedure is described in the user documentation.

14.3 Teaching positions in the shaft

Teaching positions in the shaft (emergency end switches, inspection end switches and floors) occurs as follows:

› The lift engineer brings the car into the position to be taught.

› The lift engineer checks if the position is correct.

› The lift engineer outputs a teach command to the FST.

› The FST sends a teach command to the S2 system (via CANopen)

› In the S2 system, there is a check as to whether the request is valid (installation/teach mode) and plausible.

› In the S2 system, the current position of the car is saved for the requested function.

› If teaching was successful, the lift engineer receives a visual acknowledgement via the FST display.

› After that, additional positions can be taught.

› After completing the teach process, the lift engineer checks if all taught positions have been entered into the S2 shaft table. To this end, the shaft table can be displayed via the FST.

14.4 Setting the access monitoring

The access monitoring is first set by wiring the door contacts (triangular) with the S2 safety device: if the contact opens, the locking status is permanently saved in EEPROM until this is reset via the reset function. This locking is also active even if the S2 safety system is reset (e.g. loss of operating voltage).

However, there is a problem that is not covered by this rule:

Problem scenario:
If somebody enters the protected area during a voltage loss and the access contact only has a momentary function (non-latching), the S2 safety system cannot know that there is somebody in the protected space once the voltage returns, thus resulting in an unsafe condition.

Solution:
In the case described above, the access monitoring must start in the locked state after a reset of the S2 safety system. As a result, the unsafe condition described above can no longer arise.

Implementation:
An additional, secure 24-V input is used which defines how the S2 safety system starts after a reset: locked or unlocked.

Since the locked start is the safe state, the states of the input are defined as follows:

› 24 V: system starts in the unlocked state.

› GND or open: system starts in the locked state.

Note:
This rule concerns both access monitoring instances, so that after a locked start both access monitoring instances have to be enabled, irrespective of the fact that only one access monitoring instance may be required.

14.5 Replacing hardware components

The following components may be affected by a replacement in relation to the S2 safety system:

› Sensor (LIMAX33 RED)

› S2

› Magnetic tape

› Magnetic tape bracket with switch

› FST

A replacement of the components may be required due to the following events:

› Mechanical influences (collisions, falls, etc.)
› Ambient conditions (temperature, water, lightning strikes, dust, etc.)
› Faulty electrical work (incorrect bridge set around control cabinet, etc.)
› Inadequate maintenance (sensor guide cleaning, magnetic tape sealing, etc.)

Sensor (LIMAX33 RED)

After replacement of the sensor, commissioning must be performed again because it must be assumed that the sensor has not been installed with sufficient precision relative to the magnetic tape.

The sensor must only be replaced with an identical type. The sensor properties stated on the certificate must be matching.

S2

The safety system must always be replaced with a safety system of the same type. The features specified in the certificate of the safety system must match.

Magnetic tape

Due to the absolute values, commissioning must be performed again when replacing the magnetic tape.

Magnetic tape bracket

If the bracket is shifted, for whatever reason, and the magnetic tape position changes as a result, commissioning must be performed again.

Magnetic tape switch

If the switch is replaced, it must be ensured that it switches mechanically if the tape tears or is shifted over a certain distance.
The magnetic tape switch must only be replaced with a switch of an identical type. The switch properties stated on the certificate must be matching.

FST

In terms of safety, a replacement of the FST is not considered to be critical.

14.6 Capacitive coupling

Basic principles

For capacitive coupling to have safety-critical effects, the following requirements must be met:

1. The system is based on alternating voltage
2. Active and inactive conductors run in parallel
3. No electric load on the inactive conductor
4. A small amount of voltage on the inactive conductor leads to system activation

In a lift system, these conditions are possibly fulfilled:

1. The safety circuit is powered with alternating voltage (50 Hz).
2. Two safety circuit conductors that are separated by an open door contact run in parallel in the travelling cable.
   The door contact separates the active conductor (live) from the inactive conductor (not live). Within this meaning, an active conductor also refers to all other conductors running in parallel (e.g. supply cables of the door drive, etc.) which carry AC voltage.

3. An electric voltage arises in the inactive conductor due to capacitive coupling. The voltage level depends on

- the amount of the input voltage (normally 230 V / 50 Hz)
- the geometry of the travelling cable (how long do the wires run in parallel with one another at what distance)
- the electric load at the inactive input

In all circumstances (worst case), the arising voltage must be lower than the switch-on voltage of the electrical safety device.

Application

The hardware of the safety device includes two safe safety circuit (SCT) queries. One is used on level 1 and provides information about the state of the safety circuit upstream of the input into the S2. For the other query, there is no further safety function on level 1. The information is transferred to the FST and displayed there. As a result, it is possible to determine external bridging of the safety relay SHK.

A dangerous state arises if a safety circuit switch is open, but the safety device (owing to capacitive coupling) detects a closed safety circuit.

The lift engineer is responsible for checking during commissioning whether capacitive coupling can give rise to a dangerous state in the safety device.

As demonstrated in [S2.14], systems with a maximum cable length of under 2,650 m will not experience problems with capacitive coupling.

In the case of systems with a maximum cable length of 2,650 m and higher, the following procedure must be complied with to ensure that a dangerous situation does not occur with the lift system:

The system must be placed into as poor a state as possible in terms of capacitive coupling by the lift engineer prior to a measurement. To do this, all possible AC consumers (e.g. shaft lights, car lights, etc.) must be switched on, and while all switches in the safety circuit are opened sequentially, starting with the furthermost switch, a measurement must be performed in each case with an opened and closed safety circuit.

During these measurements, a check is made to see if, with an opened safety circuit, in the FST guide

"S2 I/O status", the "SHK Input.End" is permanently displayed as open, and permanently displayed as closed with a closed safety circuit. If this is the case, then there is no capacitive coupling, and the next step can be skipped.

If capacitive coupling is detected, the extent of the coupling must be measured: the AC voltage must be determined with a multimeter at safety circuit input X14.8 (SHK CLOSED) against N-wire X15.6 (N-ANF). It must be below the defined threshold of 120 V (conservative).

Preventing capacitive coupling

The following procedures help to prevent / reduce capacitive coupling:

1. Do not route supply and return cables right next to each other in the travelling cable or in the shaft (the greater the distance between the wires, the lower the capacitive coupling).

2. Do not route the return cable right next to other AC voltage cables in the travelling cable or in the shaft (the greater the distance between the wires, the lower the capacitive coupling).

► Follow the instructions for laying the cables, *see Electricity, page 14.*

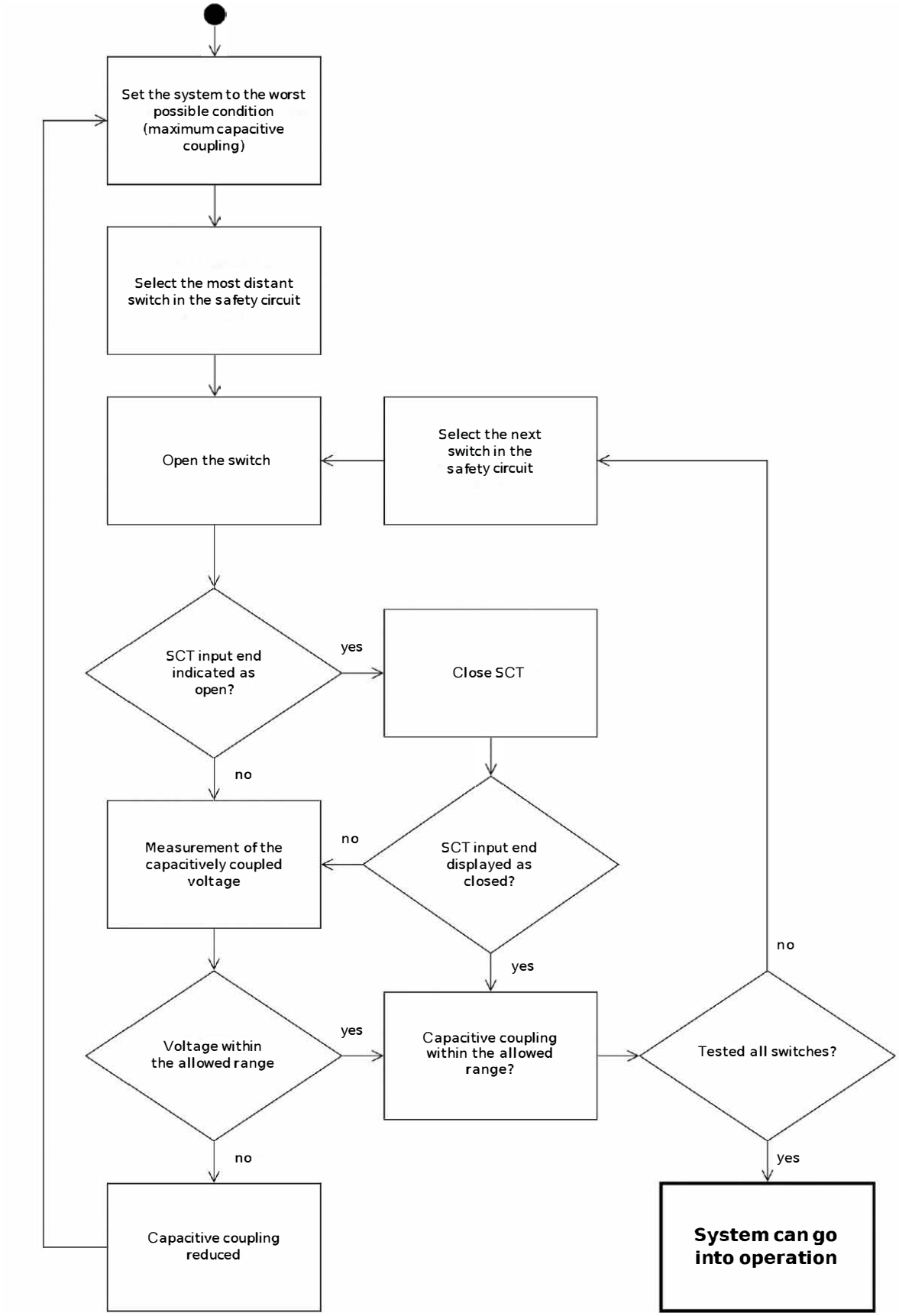
Set the system to the worst possible condition (maximum capacitive coupling)
Select the most distant switch in the safety circuit
Open the switch
Select the next switch in the safety circuit
SCT input end indicated as open?
yes
Close SCT
no
Measurement of the capacitively coupled voltage
no
SCT input end displayed as closed?
yes
no
Voltage within the allowed range
yes
Capacitive coupling within the allowed range?
Tested all switches?
no
yes
Capacitive coupling reduced
System can go into operation

Flowchart

15 Checks

General

This chapter describes how a check can be performed for the commissioning (putting into service) and recurring checks.

► When performing the checks, also take into account the existing local accident prevention regulations and the specifications of EN81.

Initial check prior to commissioning a lift system

As a rule, an initial check of the safety function takes place during installation for the systematic improvement in safety for and by the installation personnel up until commissioning
(*siehe 23 Index, Seite 202*).

The company NEW*LIFT* recommends conducting checks on the S2 system through notified bodies in line with the requirements in the table *Checks* at a minimum,
(*see Checks, page 203*).

Verification

For the verification of the S2 system, the following must be in place:

› System wiring diagram (S2 configuration sheet)

› S2 manual (S2 and LIMAX RED 33 certificate)

› S2 type plate

› LIMAX 33 RED (sensor) type plate

The hardware and software versions and the CRC of the S2 and of the sensor must match the details on the certificates. The option is available to read the versions and CRC of the S2 via the S2 info window.

The S2 configuration sheet must tally with the system conditions.

Checks when putting into service and recurring (annual) checks

The self diagnostics test is mandatory!

► Start the system for the self diagnostics by means of a RESET,
see 9.4.4 Performing a reset and activating the safety system, page 75.

Additional checks

► Perform additional checks as per the table *Checks*,
(*see Checks, page 203*).

P The checks in the individual chapters are marked with the letter "P".

Checking safety functions

It is the responsibility of the notified body to assess whether it is necessary to perform all of the following checks of the safety functions annually. The specific procedure for the tests should be considered a suggestion. The user and/or the notified body can find other ways to test the safety functions.

It is incumbent upon the user to guarantee safety when checking the safety functions.

Safebox-Konfiguration

NEWLIFT
NEUE ELEKTRONISCHE WEGE

Basisdaten

Werknummer:	XC222040	Kunde:	Mustermann
Bearbeiter (NewLift):	AL	Kennwort:	Musterauftrag
erstellt am:	08.03.2023 11:35:00	Auftragsnummer:	Muster Reduzierter SK/SG
letzte Änderung von:	-	Liefertermin:	
letzte Änderung am:	-		

Konfiguration

Safebox:	FST3 (S2)
Stückzahl:	1
Aufzugstyp:	Seilaufzug
Führungsschiene:	Zentral
Nenngeschwindigkeit Vn (m/s):	1,0
Vorauslösung (m/s) 115% von Vn:	1,15
Auslösegeschwindigkeit Vt (m/s) 125% von Vn:	1,25
max. Verzögerung aHST (m/s²):	1,2
Kabellänge S1 (m):	-
Kabellänge Sensor Limax 3R (m):	2
Magnetbandlänge (Schachthöhe) (m):	20
Magnetbandmontage Set:	gerade

Sicherheitsfunktionen	ja/nein
1.) Übergeschwindigkeit Vorauslösung 115% – Ersatz für Geschwindigkeitsbegrenzer mit VA System	nein
2.) Übergeschwindigkeit 125% – Ersatz für Geschwindigkeitsbegrenzer mit VA System	nein
3.) Verzögerungskontrollschaltung bei verkürztem Pufferhub (ab 1,25m/s)	nein
4.) Notendschalter (Standard) - Hinweis! Bei indirekt hydraulischen Aufzügen wird ein konventioneller Notendschalter zusätzlich benötigt!	ja
5.) Türüberbrückung (Einfahrt und Nachholung mit offener Tür)	ja
6.) Inspektionsendschalter (Standard)	ja
7.) Unbeabsichtigte Bewegung bei geöffneten Türen - UCM	ja
8a.) Zugangsüberwachung SG	ja
8b.) Zugangsüberwachung FK	ja
9.) Rückstellen der Zugangstürüberwachung (Taster im Schaltschrank)	ja
10.) Vorausgelöstes Anhaltesystem Schachtkopf und/oder Schachtgrube – Ersatz der Schutzraumstützen	ja
11.) Verlust der Treibfähigkeit (FK bremst nicht bzw. bewegt sich bei offenem SHK) - (Standard)	ja
12.) Verhinderung des Normalbetriebs während Bypass (Standard)	ja
13.) Inspektionsschalter – Verriegelung zwischen Inspektionsfahrt SG/FK (Standard)	ja
14.) Überwachung der Inspektionstaster (Standard) – Verriegelung/Überwachung der AUF/AB Taster und Fahrtrichtung	ja
15.) Rückholsteuerung (Service-Steuerung) - Verriegelung Rück- und Inspektionssteuerungen und Überbrückung (Standard)	ja
16a.) Mechanische Einrichtung (Klappstützen) SG	ja
16b.) Mechanische Einrichtung (Klappstützen) FK	ja
17.) Temporärer Schutzraum – Ansteuerung Absinkschutz o.ä.	ja
18.) Beschleunigungsüberwachung (6m/s2) (Standard)	ja
19.) Überwachung von Inspektions-- und Rückholgeschwindigkeit (0,63m/s bzw. 0,3m/s) (Standard)	ja
20.) Montagemodus verhindert Normalbetrieb (Standard)	ja

NEW LIFT
Neue elektronische Wege
Steuerungsbau GmbH
Lochhamer Schlag 8
82166 Gräfelfing - Germany

09.03.2023 09:06:39
Seite: 1

Tel +49 89 - 898 66 - 0
Fax +49 89 - 898 66 - 300
http://www.newlift.de
info@newlift.de
Version SV 4.3.9

Example S2 configuration

Checks

All of the tests in the following table can also be performed without the presence of somebody in the car, on the roof or in the pit.

Step	Checks	Chapter	Check when putting into service	Check during recurring checks
1	Check important system functions	*9.4*	YES	
1.a	System speed	*9.4.3*	YES	At the tester's discretion
1.b	Trigger speed	*9.5.11*	YES	YES
1.c	Approach deceleration	*9.5.12*	YES	YES
1.d	Production date	*17.1*	YES	YES
2	Check auxiliary mode control	*9.4.6*	YES	YES
3	Check SHK relay triggering	*9.4.7*	YES	At the tester's discretion
3.a	Check traction	*9.4.8*	YES	YES
3.b	Check SBR relay triggering	*9.4.9*	YES	YES - Self diagnostics during S2 RESET
4	Check folding supports protected space vers.	*9.4.10*	YES	YES – If used
5	Check the inspection control	*9.4.11*	YES	YES – If used
6	Check position system	*9.5.3*	YES	YES
7	Check loss of traction	*9.5.5*	YES	At the tester's discretion
8	Check inspection end switch	*9.5.7*	YES	At the tester's discretion
9	Check access monitoring	*9.5.8*	YES – If used	YES – If used
10	Check trigger speed	*9.5.11*	YES – If used	YES – If used
11	Check deceleration monitoring	*9.5.12*	YES – If used	At the tester's discretion
12	Check pre-triggered stopping system protected space vers.	*9.5.13*	YES – If used	At the tester's discretion
13	Check emergency end switch	*9.5.14*	YES	At the tester's discretion
14	Check bypass switch	*9.5.15*	YES	At the tester's discretion
14.a	Check door zone length	*9.5.16*	YES	YES
15	Check floor position	*9.6.1*	YES	YES
16	Check UCM	*9.6.3*	YES – If used	At the tester's discretion

15.1 Rupture valve test instruction

For the rupture valve test, it may necessary to disable the Over-speed (pre-triggering) and Over- speed (speed limiter) functions.

The reason for this is that the Over-speed detection of the S2 triggers and so the test speed which is required for triggering the valve cannot be reached.

The Over-speed detection is disabled with the following measures:

1. Activation in the FST of a "fade-out" of the drive abort command of the S2 for the FST
2. Bypassing of the S2 relays "SHK" and "SBR"

The safety functions of the S2 remain in force. There is an external bypass of the S2 trigger relay and a "fade-out" of the FST of the commands of the S2.

This measure bypasses all the safety functions of the S2 safety system and therefore must be performed with the utmost caution!

Two lift engineers or specialist personnel are required for the test!

Procedure:

- ► Block doors and landing calls. Make sure there is nobody in the car.
- ► Send the car to the top floor.
- ► `FST/Main menu/Configuration/Installation/S2-System/S2 test Functions/Rupture valve test/YES`

The line B message appears "`IGNORE S2-NOTSTOP.`"

- ► Make preparations for increasing the lowering speed; this may only be necessary after the downwards command.
- ► Switch off SHK circuit breaker F4.1.
- ► 2x wire bridges (1mm² rigid wire - stripped slightly, approx. 10 mm) in the terminal:

Insert 1x wire bridge X25:1 and 2 and 1x wire bridge X26:1 and 2 so that they form and maintain contact.

Important! Do not connect the bridges tightly! Only touch the insulation of the wires, otherwise there is a risk of electric shock!

- ► Switch on SHK circuit breaker F4.1.
- ► Give downwards command with down arrow
- ► If necessary (if not activated under point 4), activate the test speed on the control unit or valve block.
- ► Wait until the rupture valve triggers / the car stops.
- ► Check if pressure equals zero on manometer.
- ► Switch off Safety CCT circuit breaker F4.1.
- ► Remove bridges.
- ► Switch on Safety CCT circuit breaker F4.1.
- ► If necessary, if the message "`S2 SHK RELAY OPEN`" appears, perform S2 RESET and, if required, also perform SK and/or SG reset by means of S256, S256 or S207/S256.
- ► `Main menu/Configuration/Installation/S2-System/S2 test functions/RESET S2 TESTs/YES`

Note!

If the lift system has an anti creep device on the speed limiter which drops out when at a standstill, the magnet must be energised temporarily for the duration of the check (ensure 100% duty cycle!).

This is to be achieved with the following parameter change: `Main menu/Drive/Anti creep device/Enabling/NO`

16 Emergency evacuation

General

This document describes in detail the emergency evacuation procedure for a lift system with an S2 safety system.

A distinction is drawn between

› an emergency evacuation with auxiliary mode control and

› a manual emergency evacuation with the main switch switched off.

In the case of a manual evacuation (with the main switch switched off), the actuator (holding brake, lowering valve) which is supposed to enable a car movement is triggered directly and thus the safety circuit is bypassed. In this state, the access control function (shaft door emergency release) would be ineffective with protected spaces, speed monitoring / triggering and deceleration monitoring missing. In order to ensure this protection with the manual evacuation option, by means of an evacuation switch, the functions (contact from the S2 safety system "safety circuit") are transferred from the safety circuit to the control for the actuator which is responsible for the manual emergency evacuation. This is usually the holding brake or the lowering valve. The transfer of the contact interrupts the safety circuit. Normal, inspection or auxiliary mode control operation is therefore not possible without deactivating evacuation operation. Furthermore, evacuation operation is only possible with the main switch switched off.

System requirement for evacuation operation

› An emergency power supply for the S2 safety system. The size is to be configured for a minimum evacuation to the next floor or emergency door +10%. A function check of the emergency power supply in evacuation operation must be performed at least once per year.

› The shifting of the S2 contact "safety circuit" from the safety circuit to the control for the actuators that is required for an evacuation is performed by switching on the evacuation switch or contactor with positively driven contacts (external).

16.1 S2 safety functions during evacuation operation

During the manual emergency evacuation, through the "safety circuit" contact, the S2 safety system protectively engages in the emergency evacuation process by interrupting the power supply to the actuators (holding brake, lowering valve).

During the manual emergency evacuation, the following S2 safety functions are active.

Access monitoring

Triggered access monitoring with reduced protected spaces prevents an evacuation. This provides protection to people in the danger zone (no protected space) during an evacuation.

Overspeed

Triggered Over- speed detection prevents an evacuation. With Over- speed pre-triggered, the *safety circuit* contact opens, thus switching the actuator into a safe state. If the S2 safety system is also used as a substitute for a mechanical speed limiter, and thus an appropriate actuator (e.g. an electrical safety brake) is connected at the *safety brake* contact, the actuator is switched to the safe state (contact opens) when the trigger speed is exceeded.

Deceleration monitoring

Triggered deceleration monitoring prevents an evacuation.

Due to the controlled deceleration of the S2 safety system, an evacuation can also occur in systems with a reduced attachable buffer. If deceleration is not monitored in the event of an evacuation, there is a risk of the car hitting the buffer at an impermissible speed.

16.2 Protective measures for unforeseeable events

S2 safety system defect

If the S2 safety system has a defect, the system goes into a safe state. The system interrupts the power supply to the actuators that are required for an evacuation.

Low or no voltage supply

In the event of a loss of power supply, the S2 safety system is in a safe state (SHK and SBR relays open). The power supply to the actuators that are required for an evacuation is therefore interrupted. If a particular voltage threshold is undershot, the device switches off and is therefore in a safe state.

16.3 Emergency evacuation procedure with S2 safety system

1. Determine where the car is located
2. Establish contact with the people trapped inside and announce an emergency evacuation
3. Move the car with the auxiliary mode control to the next floor until the level indicator lights up.
4. Determine car position, switch off main switch and continue from step 7
5. If the car does not move, an emergency evacuation can be performed with the manual emergency evacuation option

6. Perform a manual emergency evacuation (using the electric brake release):
   - 6.1 Switch off MAIN SWITCH
   - 6.2 Switch on evacuation switch
   - 6.3 Press brake release button and monitor speed indicator
   - 6.4 If V > 0.2 m/s, then release the brake release button
   - 6.5 If V = 0.00 m/s, the brake release button can be pressed again
   - 6.6 Repeat process until the level indicator lights up
   - 6.7 Determine car position and switch off evacuation switch
7. Open shaft door in the floor in which the car is located
8. Evacuate persons from the car
9. Close the shaft door

16.4 Emergency evacuation procedure without S2 safety system

If, due to a defective S2 safety system, neither an emergency evacuation with the auxiliary mode control nor the manual emergency evacuation can be performed:

► Notify the responsible lift company.
The company must enable a secure evacuation with suitable mechanical equipment (e.g. a chain hoist) or re-establish the functioning of the S2 safety system.

If the following conditions derived from EN 81-20 5.6.6.1 b) are fulfilled:

› In the event of a manual emergency evacuation, direct visibility of the drive is possible.
› The speed is reduced to below 115% of the nominal speed by other equipment.

► The lift engineer (authorised and specialist personnel) can bypass the S2 safety system and perform a manual emergency evacuation without the S2 safety system.

16.5 Diagnostics interval

The SHK relay is tested twice daily at 04:00 and at 15:00. The FST conducts the test according to the operating states – such as standstill, calls, etc. – so as not to interfere with the normal operation of the system. The test of the SBR relay takes place independently every 13 months at the latest and shuts the lift down, provided a restart was not performed beforehand; e.g. RESET of the S2 as part of maintenance or suchlike.

17 Technical data – Sensor, magnetic tape and bracket

17.1 Marking

The type plate and additional information and configuration stickers are used for the precise identification of the system.

Type plates

There is a type plate on both the housing of the S2 and the sensor. On it, the precise type designation with associated part number are visible. The type plate also contains a unique, traceable serial number, the production date, the hardware and software version and a CRC. The information sticker on the S2 contains the manufacturer details, data concerning the electrical and mechanical properties of the device and the BMP number.

Reg.No.: TÜV-A-AT-1-23-0700-EUES
NEWLIFT Part No.: 35-88331
Version: HW: V1.02 **SW:** V2.200.020
CRC: EA878A7B
Supply: 24VDC/max. 500mA
Contact Rating: 4A/230VAC
(Fuse max B2A)
Protection: IP10
Config: See FST Guide - S2 Info
Serial No.: S000019
Prod. Date: 21.2023

S2 type plate

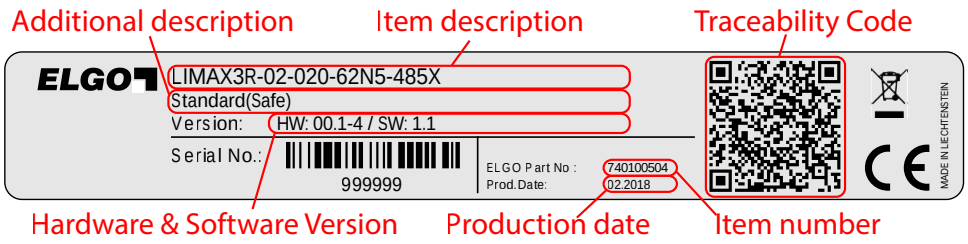

Sensor type plate

S2 information window

This information can be accessed by the FST controllers irrespective of the stickers on the S2. To do this, in the guide menu of the FST controller, the S2 information window (button: Func/ ▽ or △/S2 info/Select) must be opened.

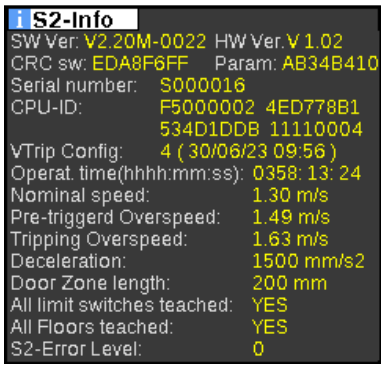

Example information window

Electrical data	Min.	Value	Max.
Supply voltage, uninterruptible PELV	21.6 V	24.0 V	26.4 V
Safety circuit voltage (50 Hz AC)	207 V	230 V	253 V
Safety circuit current carrying capacity			2 A
Safety circuit maximum fuse			B2A
24 VDC supply voltage fuse		T1A	
Residual ripple		< 100 mV	
Position telegram interval (RS485)		4 ms	
Number of safe inputs		27	
Number of safety circuit inputs		1	
Number of electronic outputs	1 potential-free contact, door zone indicator 24 VDC max. 0.1 A		
Interfaces	CANopen - DS406, RS485 for sensor communication		

Safety relay	
Number of safety relays	4 x 2
Voltage	250 VAC.
Contact rating	AC15 / 4A

Ambient conditions	
Ambient operating temperature	0 … +65 °C
Ambient storage temperature	-20 … +70 °C
Humidity in operation (non-condensing)	0… 95 %
Humidity in storage (non-condensing)	0.. 100 %
Operating altitude	Max. 2,000 m above sea level
EMC interference immunity	EN 12015 / EN 12016
Vibration/shock resistance	EN 60068-2-6 / EN 60068-2-27)

System data	
System reaction time (excluded are separately listed times)	Maximum 169 ms
UCM reaction time	89 ms
Temporary protected space function	1625 ms
Loss of traction - standstill monitor	100 mm + 69 ms
Loss of traction - brake monitor	1249 ms
Maximum service life	20 years

17.2 Technical data - Sensor

The sensor is fixed to the car or the car frame. The installation position is determined by the respective conditions.

The integrated installation slots on the measurement system housing enable easy installation from 3 sides.

Note! The device has an earthing lug. A suitable earthing cable (see delivery contents) must be connected to this and an earth wire terminal in the car top box.

Sensor dimensions

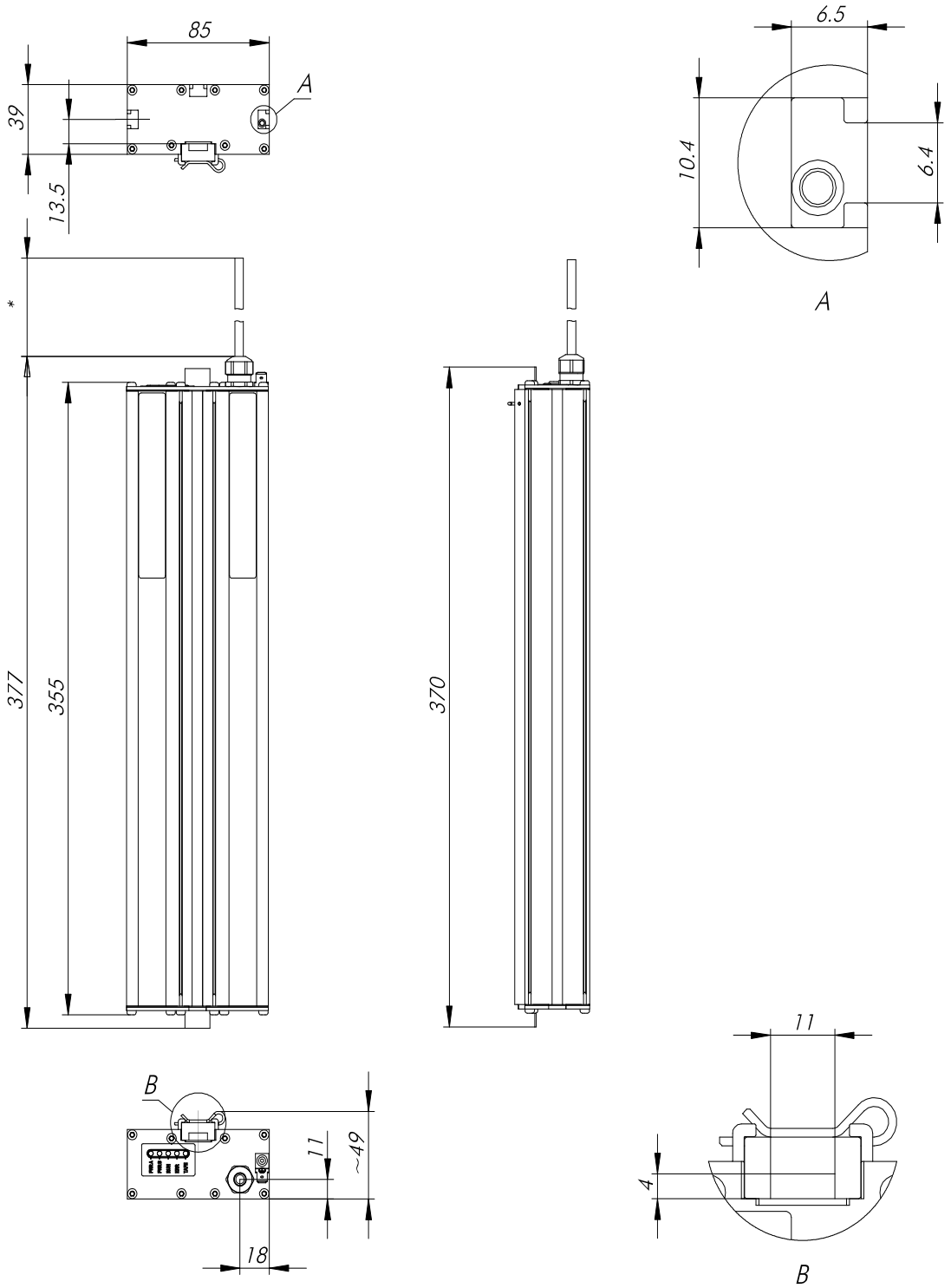

Dimensions in mm

Mechanical data - Sensor	
Type	LIMAX33 RED (standard version)
Measurement principle	absolute
Measuring method	linear
Maximum measurement length	262 m
Drive speed	Max. 10 m/s
System resolution	*see Type code, page 211*
Repeat accuracy	+/- 1 increment
System accuracy at 20°C	+/- (1000 µm + 100 µm x L[m]) L = Measurement length in metres
Sensor distance to magnetic tape	4 mm
Dimensions without cable	L x W x H = 355 x 85 x 48 mm
Housing material	Aluminium
Connection types	Circular connector, 5-pin M12 and D-Sub, 9-pin *see Type code, page 211*
Sensor cable	2 m and 5 m
Weight	Approx. 900 g without cable (cable approx. 60 g/m)

Ambient conditions of the sensor	
Storage temperature	-20°C ... +85°C
Operating temperature	-10°C...+70°C, (-20°C...+75°C on request)
Humidity	Max. 95%, non-condensing
Protection type	IP54 (acc. to EN 60529)
Operating altitude	Max. 2,000 m above sea level
EMC emitted interference / interference immunity	Acc. to EN 12015 / EN 12016
Vibration/shock resistance	Acc. to EN 60068-2-6 / EN 60068-2-27, EN 60068-2-29

Electrical data of the sensor	
Supply voltage	A power supply unit with safety extra-low voltage (SELV) or protective extra-low voltage (PELV) must be used
Residual ripple	< 100 mVpp
Reverse polarity protection	Integrated
Power consumption	Max. 200 mA @ 24 VDC without loading the output for the door zone indicator.
Interfaces	RS-485
Output/interface protection	RS-485 interface: short circuit-proof
Cable length	Acc. to EIA/RS-485 specification
Maximum service life	20 years

Type code

Example: LIMAX3R = LIMAX33 RED (2-channel) or LIMAX3R-02-020-62N5-485X

Code	Meaning	Details
LIMAX3R	Device name	LIMAX3R = LIMAX33 RED (2-channel)
02	Version	02 = 2. Special variant
020	Signal cable length	020 = 2.0 m 050 = 5.0 m

62N5	Resolution	62N5 = 62,5 µm = 0,0625 mm
485X	Interface	485X = RS485 (special protocol, separately defined using version number) ATTENTION! RS485 interface is always terminated.
D-Sub	Connection options	9-pin Plug

17.2.1 Pin assignment for D-sub connector, LIMAX3R/D9M sensor

FSM2	FST-3	LIMAX3R	Pin
USP+T	Inc_B/ABS-Data	24V (br)	4
USP+R	Inc_A/ABS-Clock	RS485+ (ye)	2
USP-R	Inc_¬A/ABS-¬clock	RS485- (gr)	7
GND	GND	0V (wh)	5

17.2.2 Sensor bracket

Sensor bracket for the LIMAX33 RED sensor with 4x screws, washers and nuts.

Bracket dimensions

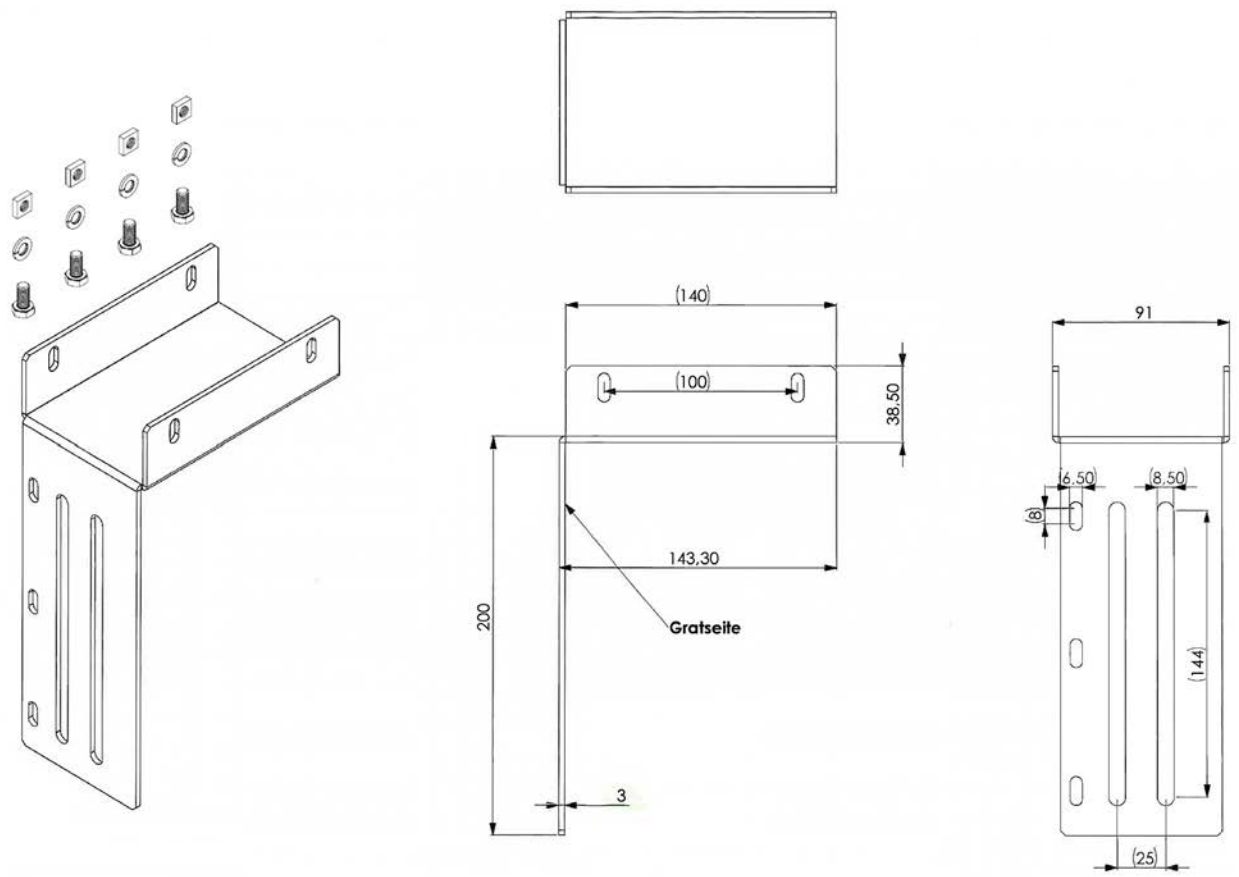

Dimensions in mm

17.3 Technical data - Magnetic tape

The magnetic tape consists of two components:

› The magnetic tape itself, which carries the position information.

› A mechanical feedback tape made out of stainless steel.

Magnetic tape dimensions

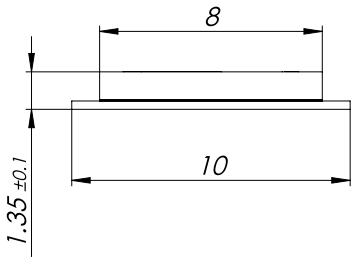

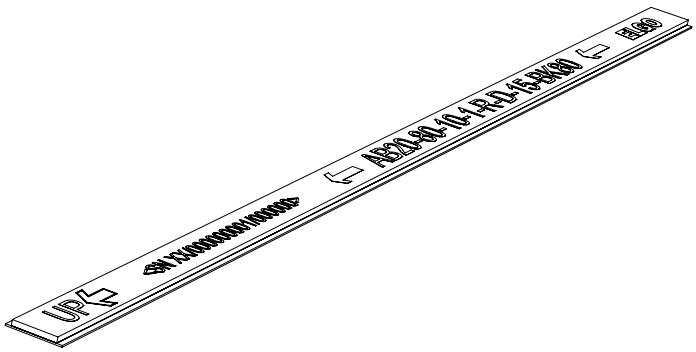

Dimensions in mm

Technical data - Magnetic tape	
Type	AB20-80-10-1-R-D-15-BK80
Coding	Absolute, 15 bit
Pole pitch	8 mm (+/- 0.05 mm)
Maximum tape length	262 m per roll
Maximum length error	+/- 100 µm/m
Dimensions	W/W1 x H = 10 mm (+/- 0.1) / 8 mm (+/- 0.2) x 1.35 mm (+/- 0.1)
Coefficient of linear expansion	$\alpha = 16 \times 10^{-6}$ 1/K
Thermal linear expansion	$\Delta L[m] = L[m] \times \alpha[1/K] \times \Delta\vartheta\ [K]$ (L = tape length in metres, $\Delta\vartheta$ = relative temperature change)
Bending radius	At least 50 mm
Weight	Approx. 53 g/m
Tape imprint	Standard, black printing ink, character height >= 5 mm
External magnetic influence	External magnetic fields must not exceed 64 mT (640 Oe; kA/m) on the magnetic tape surface, as this can damage or destroy the magnetic tape coding.
Protection type	Carrier strip made of stainless steel

Ambient conditions of the magnetic tape	
Operating temperature	-20 C … +70 °C
Storage temperature	Short term: -40 °C … +85 °C Medium term: -20 C … +70 °C
Relative humidity	Max. 95%, non-condensing

17.4 Technical data – Magnetic tape bracket

Type designation	Description
LIMAX S-RMS	Magnetic tape assembly kit for rail fixing

Note! Installation position of the switch must match the illustration! This ensures that the switch is actuated from both directions.

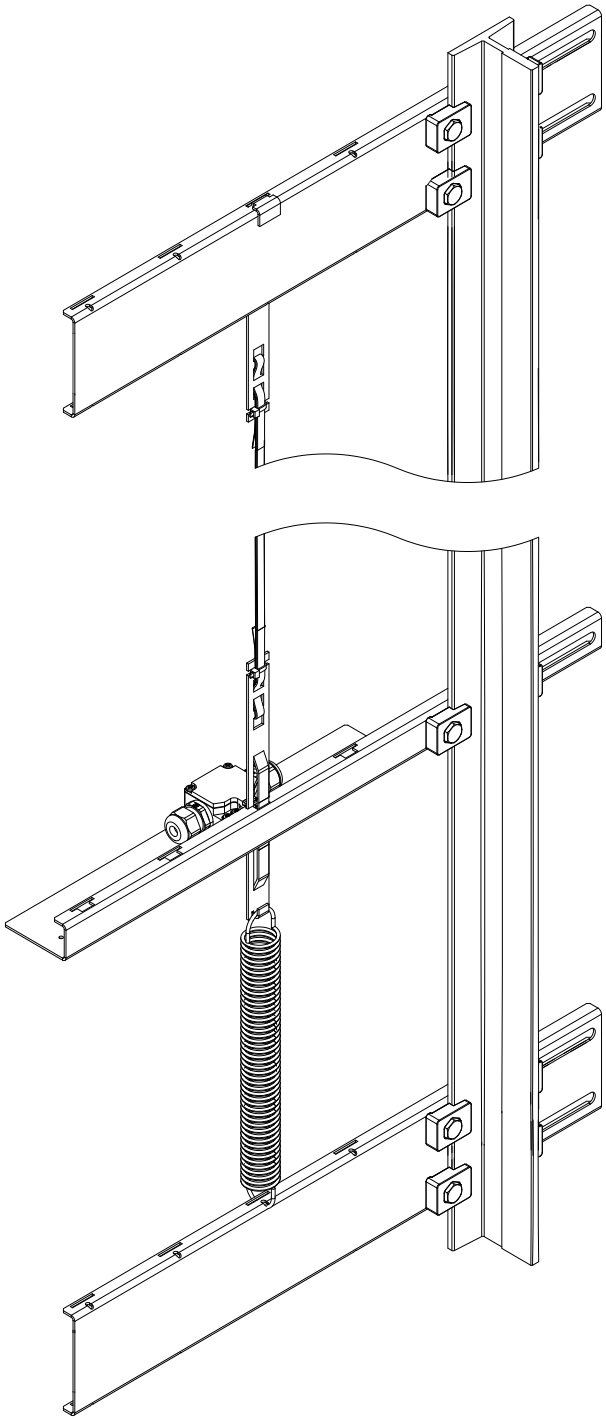

LIMAX S-RMS

Type designation	Description
Tape switch	Latching switch for the presence monitoring of the magnetic tape
Model	Schmersal / Type ZS 256-11ZR-1519 or ZS 236-02ZR-1519 latching

18 Functions and properties of switches, sensors and actuators

General

The safety system is composed as follows:

18.1 Sensor combination

LIMAX33 RED plug	Position function
Connecting cable between S2 and LIMAX33 RED	LIMAX33RED

S2 terminal	Tape switch function	Switch property
X48:3	Schmersal ZS 256-11ZR-1519 or ZS 236-02ZR-1519 latching	Safety switch acc. to EN 81-20:2014, 5.11.2.2, positively opening*)

*) Acc. to EN 60947-5-1:2009

S2 terminal	Bypass function	Switch property
X48:6	Bypass monitoring switch	Safety switch acc. to EN 81-20:2014, 5.11.2.2, positively opening*)

*) Acc. to EN 60947-5-1:2009

S2 terminal	Car inspection control function	Switch/button property
X16:1	Inspection switch Drive switch	Safety switch acc. to EN 81-20:2014, 5.11.2.2, positively opening and positively driven*)
X16:2	UP	Button*)
X16:3	DOWN	Button*)
X16:4	Fast	Button*)

*) Acc. to EN 60947-5-1:2009

S2 terminal	Pit inspection control function	Switch/button property
X47:8	Inspection switch Drive switch	Safety switch acc. to EN 81-20:2014, 5.11.2.2, positively opening and positively driven*)
X47:7	UP	Button*)
X47:6	DOWN	Button*)
X47:5	Fast	Button*)

*) Acc. to EN 60947-5-1:2009

S2 terminal	Auxiliary mode switch function	Switch/button property
X18:5	Auxiliary mode switch	Safety switch acc. to EN 81-20:2014, 5.11.2.2, positively opening and positively driven*)
X18:4	UP	Button*)
X18:3	DOWN	Button*)

*) Acc. to EN 60947-5-1:2009

S2 terminal	Access control function	Switch property
X47:1	Car roof access control monitoring switch**)	Safety switch acc. to EN 81-20:2014, 5.11.2.2, positively opening*)
X47:2	Shaft pit access control monitoring switch**)	Safety switch acc. to EN 81-20:2014, 5.11.2.2, positively opening*)

*) Acc. to EN 60947-5-1:2009

**) Refers to the protected space in the shaft head / in the shaft pit

S2 terminal	Car roof moving stops function*)	Switch property
X48:1	Car roof stops monitoring switch, normal operation	Safety switch acc. to EN 81-20:2014, 5.11.2.2, positively opening*)
X48:2	Car roof stops monitoring switch, inspection operation	Safety switch acc. to EN 81-20:2014, 5.11.2.2, positively opening*)

*) Acc. to EN 60947-5-1:2009

S2 terminal	Shaft pit moving stops function**)	Switch property
X47:4	Shaft pit stops monitoring switch, normal operation	Safety switch acc. to EN 81-20:2014, 5.11.2.2, positively opening*)
X47:3	Shaft pit stops monitoring switch, inspection operation	Safety switch acc. to EN 81-20:2014, 5.11.2.2, positively opening*)

*) Acc. to EN 60947-5-1:2009

**) Refers to the protected space in the shaft head / in the shaft pit

S2 terminal	Access control reset function	Button property
X18:2	Car roof access control key switch reset**)	Button *)
X18:1	Shaft pit access control key switch reset**)	Button *)
X48:5	Access control reset configuration***)	Wire bridge

*) Acc. to EN 60947-5-1:2009

**) Refers to the protected space in the shaft head / in the shaft pit

***) See operating instructions for meaning

18.2 Logic circuit (S2 monitoring)

S2 terminal	Power supply function	Property
X1:1	24 V power supply	+24VDC +/-10% PELV I: approx. 300mA
X1:2	0 V/GND power supply	GND
X1:3	PE	Earth

S2 terminal	Safe sensor interface to S2 function	Property
X10:1	n.a.	NEW LIFT internal
X10:2	n.a.	
X10:3	n.a.	
X10:4	n.a.	
X10:5	n.a.	
X10:6	n.a.	
X10:7	n.a.	
X10:8	RS485_A	RS485 SIL3 signal from position encoder
X10:9	RS485_B	
X10:10	GND	
X10:11	n.a.	n.a.
X10:12	n.a.	
X10:13	CAN2_H_CON	CAN BUS connection not safety-relevant
X10:14	CAN2_L_CON	

S2 terminal	CAN-OPEN interface for further devices or termi. function	Property
X43:1	CAN- Low	Not safety-relevant
X43:2	GND	Not safety-relevant
X43:3	CAN-High	Not safety-relevant

18.3 Combination of actuators and sensors

S2 terminal	SHK inputs function	Switch property
X14:1	Emergency stop car	230VAC +/-10%; switch according to safety circuit requirement*
X14:2	Emergency stop – relay 3	230VAC +/-10%; switch according to safety circuit requirement*
X14:3	Door contact C	230VAC +/-10%; switch according to safety circuit requirement*
X14:4	Door contact B	230VAC +/-10%; switch according to safety circuit requirement*
X14:5	Door contact A	230VAC +/-10%; switch according to safety circuit requirement**
X14:6	Door lock A	230VAC +/-10%; switch according to safety circuit requirement*
X14:7	Door lock B	230VAC +/-10%; switch according to safety circuit requirement*
X14:8	CCT closed	230VAC +/-10%; switch according to safety circuit requirement*

S2 terminal	SHK function	SHK relay property
X15:1	N-IN start (N)	230VAC +/-10%;
X15:2	SHK start	230VAC +/-10%; switch according to safety circuit requirement*
X15:3	Reserve wire 2	230VAC +/-10%; switch according to safety circuit requirement*
X15:4	Reserve wire 1	230VAC +/-10%; switch according to safety circuit requirement*
X15:5	Bypass END relay 2	230VAC +/-10%; *
X15:6	CCT – freely usable query	230VAC +/-10%; switch according to safety circuit requirement*

S2 terminal	SHK actuator function	SHK relay property
X22:1	N-OUT (N)	
X22:2	SHK-OUT relay 1	AC 15 / 2A

S2 terminal	SHK actuator function, additional contact for evacuation	SHK relay property
X25:1	SHK contact relay 1 contact 2	AC 15 / 2A
X25:2	SHK contact relay 1 contact 2	AC 15 / 2A

*) SHK relay must act directly on the devices that control the power supply to the drive and to the electromechanical brake. To be integrated at a point in the safety circuit that cannot be bypassed.

S2 terminal	SBR / ABS actuator function	SBR relay property
X26:1	SBR, input / SHK contact*)	AC 15 / 2A
X26:2	SBR, output / SHK contact*)	AC 15 / 2A

*) SBR relay must act directly on the power supply to the braking element acc. to EN 81-20:2014, 5.6.7 and/or to the blocking device and/or triggering device which engages the safety gear on the car and/or the stopping equipment on the car, or on the devices which control the power supply to the braking element acc. to EN 81-20:2014, 5.6.7 and/or to the blocking device and/or triggering device which engages the safety gear on the car and/or the stopping equipment on the car. Design dependent on the safety function. To be integrated at a point in the safety circuit that cannot be bypassed; and the operating instructions are to be complied with.

S2 terminal	Door zone signal function
X46:1	NO contact max. 24VDC ; 0.1A
X46:2	NO contact max. 24VDC ; 0.1A

S2 terminal	Mechanical diagnostics function Stopping device*)	Switch property
X48:4	Feedback switch of the mechanical stopping equipment	Switch, positively opening**)

S2 terminal	Safe, freely programmable, position-dependent outputs	Actuator / contact property
X45:1	n.a.	n.a.
X45:2	n.a.	n.a.
X45:3	n.a.	n.a.
X45:4	n.a.	n.a.
X45:5	n.a.	n.a.
X45:6	n.a.	n.a.

*) Braking element acc. to EN 81-20:2014, 5.6.7, safety gear on the car and/or the stopping equipment on the car. Design dependent on the safety function. The operating instructions are to be complied with.

The COM button of the inspection control must be integrated as per the schematic diagram. The contacts must be positively driven (acc. to IEX 60947-5-1:2009).
see 20 Overview wiring diagram, page 222.

**) Refers to the protected space in the shaft head / in the shaft pit

18.4 Spare parts list

Spare part	Article number
FST-3 control module	35-88330
S2 safety module Standard configuration Vt:0.375 m/s - aHST:1.2 m/s	35-88331
Connection cable X10/ FST-3 -> S2	35-88332
LIMAX RMS3R magnetic tape sensor with D-SUB plug / 2 m cable	49-87004
LIMAX RMS3R magnetic tape sensor with D-SUB plug / 3 m cable	49-87005
Mounting bracket for LIMAX3R + fasteners	49-04001
Earth wire for LIMAX33RED 2m	49-06050
Earth wire for LIMAX33RED 5m	49-06055
LIMAX RMS90 S2 angled bracket for tape switch	49-04025
LIMAX RMS S2 straight bracket for tape switch	49-04026
Installation material for RMS/90 S2, tape switch, switch plate	49-84020
Magnetic tape switch (control switch ZS256-11ZR-1519)	42-13023
Magnetic tape for LIMAX 11 m - 130 m	42-04110 - 42-04230
LIMAX RMS 90 angled magnetic tape bracket (pair)	42-04324
LIMAX RMS straight magnetic tape bracket (pair)	42-04323
Installation material for RMS/90 - spring/connection plate	42-04321
Cotter pin for LIMAX guide	42-04331

19 Maintenance, servicing, repairs

› The devices S2 and LIMAX(3)3 RED are maintenance-free.

› The magnetic tape is maintenance-free.

› Repairs and the opening of the devices by the user are not permitted.

› If necessary, checks and repairs will be performed by NEW*LIFT* Steuerungsbau GmbH.

› In the event of irreparable damage, or at the end of the maximum product service life, the devices and the magnetic tape must be disposed of according to the regulations that apply in the country in question.

› Disassembly and use in another lift system is not permitted due to the system-specific data set of the FST-3.

20 Overview wiring diagram

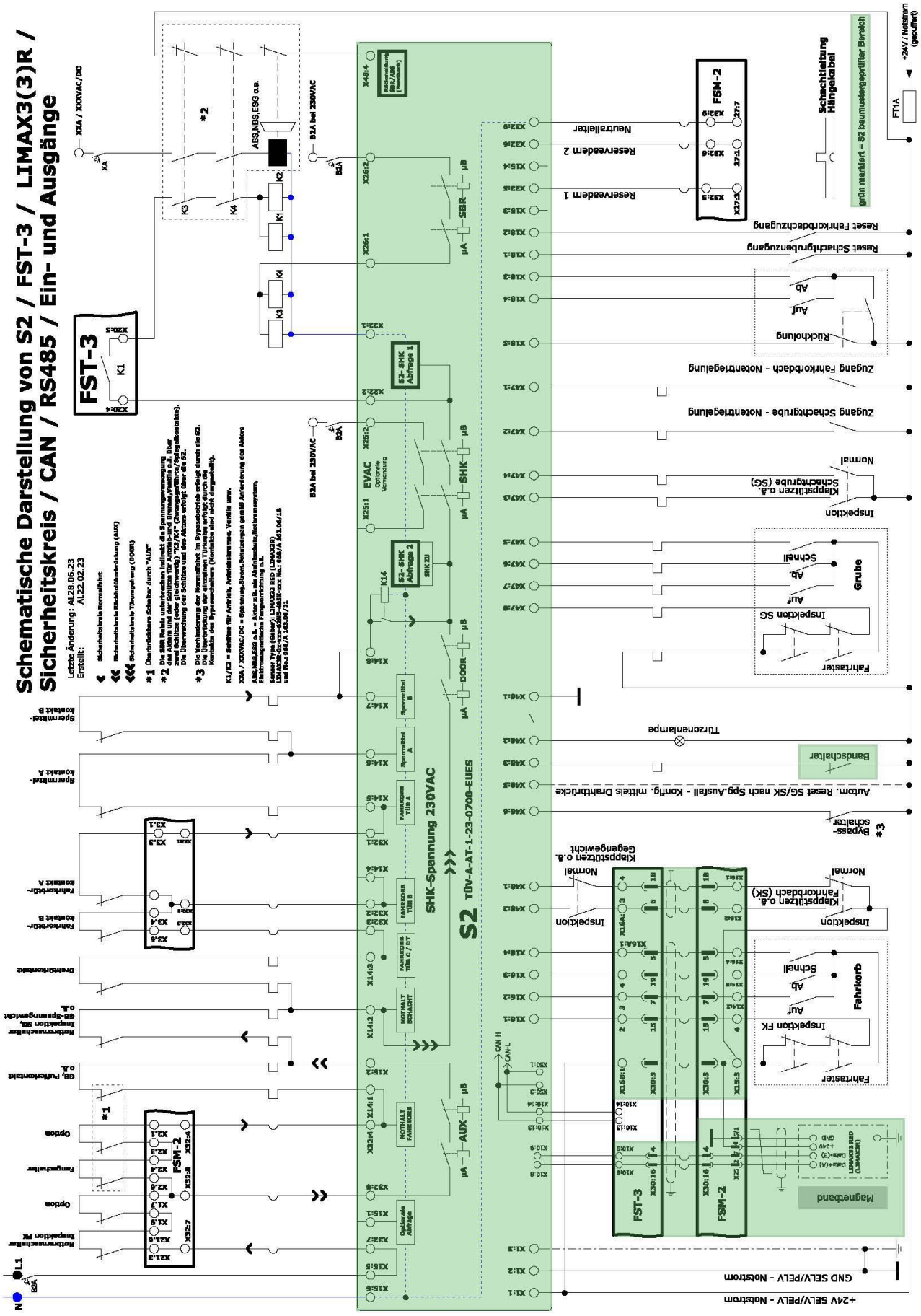

21 Change history

Version	Date	Comment

22 Certificates

22.1 Declarations of conformity

NEWLIFT
NEUE ELEKTRONISCHE WEGE

Declaration of Conformity

Product description:
Control Modul für Lifts

Device type: "FST-3" in all delivered variants

The named device type has been developed, designed and manufactured in accordance with the following directives:

- Low Voltage Directive 2014/35/EU
- EMV-Directive 2014/30/EU
- Lift Directive 2014/33/EU

The following standards were used to assess the unit:

- EN81-20/50:2020
- EN12015:2020
- EN12016:2013

There exists a complete technical documentation. The manual for the devices is available. The safety instructions of the delivered manual must be observed! This declaration confirms the conformity of the mentioned standards and directives. It does not, however, include a guarantee of characteristics.

Graefelfing, 28.06.2023

Legally binding signature:

Peter Zeitler, Managing Director

NEW *LIFT* - Neue elektronische Wege Steuerungsbau GmbH
Lochhamer Schlag 8 - 82166 Graefelfing - Germany

NEWLIFT
NEUE ELEKTRONISCHE WEGE

EU Declaration of Conformity

According to the EU-directive

Product description:

Electrical,electronic and programmable system for safety related applications for lifts

Device type: "S2" in all delivered variants

The EU-type examination (Certificate-no. TÜV-A-AT-1-23-0700-EUES) was conducted by the TÜV AUSTRIA SERVICES GMBH, ID-Nr.: CE0408.

The manufacturing control according to ARL 2014/33/EU Annex VI is made by the TÜV AUSTRIA SERVICES GMBH, ID No.: CE0408.

The named device type has been developed, designed and manufactured in accordance with the following directives:

- Low Voltage Directive 2014/35/EU
- EMV-Directive 2014/30/EU
- Lift Directive 2014/33/EU

The following standards were used to assess the unit:

- EN81-20/50:2020
- EN81-21:2022
- EN12015:2020
- EN12016:2013

There exists a complete technical documentation. The manual for the devices is available. The safety instructions of the delivered manual must be observed! This declaration confirms the conformity of the mentioned standards and directives. It does not, however, include a guarantee of characteristics.

Graefelfing, 28.06.2023

Legally binding signature:

Peter Zeitler, Managing Director

NEW *LIFT* - Neue elektronische Wege Steuerungsbau GmbH
Lochhamer Schlag 8 - 82166 Graefelfing - Germany

22.2 Type examination certificate

ZERTIFIKAT | CERTIFICATE | CERTIFICAT | CERTIFICADO | СЕРТИФИКАТ | شهادة | 证书 | 인증서

TÜV-A-AT-1-23-0700-EUES

TÜV AUSTRIA

EU-Baumusterprüfbescheinigung

nach EU Richtlinie für Aufzüge 2014/33/EU

Certificate of EU-Type Examination

according EU Directive for Lifts 2014/33/EU

Produkt / *Product:* Elektrisches, elektronisches sowie programmierbares System für sicherheitsbezogene Anwendungen für Aufzüge

Electrical, electronic and programmable system for safety related applications for lifts

Type / *Type:* S2

Antragsdatum / *Date of application:*
11.02.2021

Bescheinigungsnummer / *Certificate number:*
TÜV-A-AT-1-23-0700-EUES

Zugelassene Stelle / *Approved body:*
TÜV AUSTRIA GMBH
Deutschstraße 10
A-1230 Wien
ID-Nr.: 0408

Bescheinigungsinhaber / *Certificate holder:*
NEW LIFT Neue elektronische Wege Steuerungsbau GmbH
Lochhamer Schlag 8, D-82166 Gräfelfing, DE

Prüfstelle / *Test laboratory:*
TÜV AUSTRIA GMBH
Deutschstraße 10
A-1230 Wien

Hersteller / *Manufacturer:*
NEW LIFT Neue elektronische Wege Steuerungsbau GmbH
Lochhamer Schlag 8, D-82166 Gräfelfing, DE

Prüfgrundlage:
Basis of examination:
EN 81-50:2020, 5.6, 5.8, 5.15
EN 81-20:2020, *)
EN 81-21:2022, *)

Datum und Nummer des Prüfprotokolls:
Date and number of laboratory report:
28.06.2023, 2023-AT-0002

Bemerkungen:
Remarks:
Das geprüfte Produkt erfüllt die Prüfgrundlagen im Rahmen des im Anhang 1 dieser Bescheinigung definierten Anwendungsbereichs. *)
*The product fulfils the base of examination in the scope of application, defined in the annex 1 of this certificate. *)*

Verbreitung dieser Bescheinigung nur im Ganzen mit Anhang 1 und darin angeführten Unterlagen.
Spread of this certificate allowed complete only with annex 1 and documents called there.

29.06.2023
Gültig ab
Valid from

Ing. Thomas Maldet
Zertifizierungsstelle
Certifying Department

siehe Anhang 1 / see Annex 1
Gültig bis
Valid until

Akkreditierung Austria A 0944 ISO/IEC 17065

TÜV AUSTRIA GMBH TÜV AUSTRIA

FM-ITR-KA-0001a, Rev.00

Seite / *Page:* 1/1

TÜV AUSTRIA GMBH TÜV AUSTRIA

TÜV-A-AT-1-23-0700-EUES – Anhang 1 / *Annex 1*

TÜV AUSTRIA

TÜV AUSTRIA GMBH

Notified Body 0408

Anhang 1 zu / *Annex 1 to*
EU-Baumusterprüfbescheinigung / *Certificate of EU-Type Examination*
TÜV-A-AT-1-23-0700-EUES

Wien, 29.06.2023

Dieser Anhang wurde erstellt in: ☒ Deutsch / *German*
This annex has been issued in: ☒ Englisch / *English*

---

1. Anwendungsbereich / *Scope of application*

1.1 Das elektrische, elektronische sowie programmierbare System S2 Auswerteeinheit mit LIMAX33 RED darf in Aufzugsanlagen eingesetzt werden. Das Sicherheitssystem besteht aus den Sensoren, der programmierbaren elektronischen Auswerteeinheit und den Aktoren. Das Sicherheitssystem führt mehrere sicherheitsbezogene Anwendungen aus. Der Sensor LIMAX33 RED liest die absolute Position vom kodierten Magnetband, welches über die gesamte Förderhöhe hängend im Schacht montiert wird. Diese Positionswerte sind der Ausgang des Sensors und werden von der Auswerteeinheit S2 ausgewertet und verarbeitet. Die Auswerteeinheit S2 nimmt die ermittelten Daten entgegen und wertet diese mit den Referenzpositionen aus. Diese Referenzpositionen für die Türzone, UCM-Zone, die Notendschalter, die Inspektionsendschalter, Inspektionsnotendschalter und die Verzögerungskontrollschalter werden in einem Lernvorgang dem Gerät bekannt gemacht. Sollte sich aufgrund der aktuellen Position des Fahrkorbs ein Zustand zeigen, der als unsicher bewertet wird, so werden definierte Ausgangskontakte geöffnet. Ein Öffnen dieser Kontakte muss den Aufzug in einen sicheren Zustand versetzen.

The electrical, electronic and programmable system S2 control device with LIMAX33 RED may be used in lifts. The safety system consists of the sensors, the programmable electronic evaluation unit and the actuators. The safety system performs several safety-related-applications. The sensor LIMAX33 RED reads the absolute position of the coded magnetic tape, which is installed over the whole travel height in the lift shaft. These position values are the output of the sensor and are evaluated and processed by the control device S2. The control device S2 receives the collected data and evaluates them with the reference positions. These reference positions for the door zone, UCM-zone, final limit switches, additional limit switches of the inspection, final limit switches of the inspection and retardation control switches are made known to the device in a learning process. If the actual position of the car shown, is rated as unsafe state, the defined output contacts will open. Opening of these contacts must put the lift in a safe state.

1.2 Folgende Anforderungen wurden definiert / *The following requirements have been defined:*

a. EN 81-50: 2020, Abschnitt / *Clause* 5.6:

Baumusterprüfung für Sicherheitsschaltungen mit elektronischen Bauelementen
Type examination of safety circuits containing electronic components

TÜV AUSTRIA GMBH

TÜV-A-AT-1-23-0700-EUES – Anhang 1 / *Annex 1*

1.3 Das Sicherheitssystem setzt sich aus folgenden Teilsystemen zusammen:
Safety system consists of the following partial systems:

1.3.1 Kombination von Sensoren / *Combination of sensors*

LIMAX33 RED Stecker *LIMAX33 RED plug*	Funktion Position *Function position*
Verbindungskabel zwischen S2 und LIMAX33 RED *Cable connection between S2 and LIMAX33 RED*	LIMAX33RED

S2 Stecker / *Plug* Pin Nummer / *Number*	Funktion Bandschalter *Function magnatic tape occupancy sensor*	Schalter Eigenschaft *Switch characteristic*
X48:3	Schmersal ZS 256-11ZR-1519 oder ZS 236-02ZR-1519 rastend *Schmersal ZS 256-11ZR-1519 or ZS 236-02ZR-1519 locking*	Sicherheitsschalter gemäß EN 81-20:2020, 5.11.2.2, zwangsöffnend*) *Safety contact according to EN 81-20:2020, 5.11.2.2, positively driven*)*

*) gemäß / *according to* EN 60947-5-1:2009

S2 Stecker / *Plug* Pin Nummer / *Number*	Funktion Bypass *Function bypass*	Schalter Eigenschaft *Switch characteristic*
X48:6	Überwachungsschalter Bypass *Monitoring switch bypass*	Sicherheitsschalter gemäß EN 81-20:2020, 5.11.2.2, zwangsöffnend*) *Safety contact according to EN 81-20:2020, 5.11.2.2, positively driven*)*

*) gemäß / *according to EN 60947-5-1:2009*

S2 Stecker / *Plug* Pin Nummer / *Number*	Funktion Inspektionsteuerung Fahrkorb *Function control of insection car*	Schalter/Taster Eigenschaft *Switch/Push button characteristic*
X16:1	Inspektionsschalter / *Inspection operation switch* Fahrschalter / *Run schwitch*	Sicherheitsschalter bistabil gemäß EN 81-20:2020, 5.11.2.2, zwangsöffnend und zwangsgeführt*) *Safety contact bi-stable according to EN 81-20:2020, 5.11.2.2, positively driven and force-guided*)*
X16:2	Auf / *Up*	Taster / *Push button*)*
X16:3	Ab / *Down*	Taster / *Push button*)*
X16:4	Schnell / *Fast*	Taster / *Push button*)*

*) gemäß / *according to* EN 60947-5-1:2009

TÜV AUSTRIA GMBH TÜV AUSTRIA

TÜV-A-AT-1-23-0700-EUES – Anhang 1 / *Annex 1*

TÜV AUSTRIA

S2 Stecker / *Plug* Pin Nummer / *Number*	Funktion Inspektionssteuerung Grube *Function control of insection pit*	Schalter/Taster Eigenschaft *Switch/Push button characteristic*
X47:8	Inspektionsschalter / *Inspection operation switch* Fahrschalter / *Run schwitch*	Sicherheitsschalter bistabil gemäß EN 81-20:2020, 5.11.2.2, zwangsöffnend und zwangsgeführt*) *Safety contact bi-stable according to EN 81-20:2020, 5.11.2.2, positively driven and force-guided*)*
X47:7	Auf / *Up*	Taster / *Push button*)*
X47:6	Ab / *Down*	Taster / *Push button*)*
X47:5	Schnell / *Fast*	Taster / *Push button*)*

*) gemäß / *according to* EN 60947-5-1:2009

S2 Stecker / *Plug* Pin Nummer / *Number*	Funktion Rückholsteuerung *Function control of emergency*	Schalter/Taster Eigenschaft *Switch/Push button characteristic*
X18:5	Rückholschalter *Emergency electrical operation switch*	Sicherheitsschalter bistabil gemäß EN 81-20:2020, 5.11.2.2, zwangsöffnend und zwangsgeführt*) *Safety contact bi-stable according to EN 81-20:2020, 5.11.2.2, positively driven and force-guided*)*
X18:4	Auf / *Up*	Taster / *Push button*)*
X18:3	Ab / *Down*	Taster / *Push button*)*

*) gemäß / *according to* EN 60947-5-1:2009

S2 – FST-3*)	Funktion S2 Error Reset, Montagemodus, Teachmodus *Function S2 Error Reset, Installationmodus, Teachmodus*	Funktions Eigenschaft *Function characteristic*
	S2 Error Reset / *S2 Error Reset*	Rückholschalter und abgesicherte CAN-Nachrichten zwischen FST-3*) und S2 *Emergency electrical operation switch and secured CAN-messages between FST-3*) and S2*
	Montagemodus / *Installation modus*	Rückholschalter und abgesicherte CAN-Nachrichten zwischen FST-3*) und S2 *Emergency electrical operation switch and secured CAN-messages between FST-3*) and S2*
	Teachmodus / *Teach modus*	Rückholschalter und abgesicherte CAN-Nachrichten zwischen FST-3*) und S2 *Emergency electrical operation switch and secured CAN-messages between FST-3*) and S2*

*) Steuerung / *Controller* FST-3

S2 Stecker / *Plug* Pin Nummer / *Number*	Funktion Zugangskontrolle *Function acess control*	Schalter Eigenschaft *Switch characteristic*
X47:1	Überwachungsschalter Zugangskontrolle Fahrkorbdach**) *Monitoring switch of acess control car roof**)*	Sicherheitsschalter gemäß EN 81-20:2020, 5.11.2.2, zwangsöffnend*) *Safety contact according to EN 81-20: 2020, 5.11.2.2, positively driven*)*
X47:2	Überwachungsschalter Zugangskontrolle Schachtgrube**) *Monitoring switch of acess control pit**)*	Sicherheitsschalter gemäß EN 81-20: 2020 5.11.2.2, zwangsöffnend*) *Safety contact according to EN 81-20: 2020, 5.11.2.2, positively driven*)*

*) gemäß / *according to* EN 60947-5-1:2009
**) bezieht sich auf den Schutzraum im Schachtkopf bzw. in der Schachtgrube / *Refers to sufficient refuge space in the headroom or in the pit*

TÜV AUSTRIA GMBH

TÜV-A-AT-1-23-0700-EUES – Anhang 1 / *Annex 1*

S2 Stecker / *Plug* Pin Nummer / *Number*	Funktion bewegliche Anschläge Fahrkorbdach**) *Function movable stops car roof**)*	Schalter Eigenschaft *Switch characteristic*
X48:1	Überwachungsschalter Anschläge Fahrkorbdach Normalbetrieb *Monitoring switch of stops car roof normal operation*	Sicherheitsschalter gemäß EN 81-20:2020, 5.11.2.2, zwangsöffnend*) *Safety contact according to EN 81-20:* 2020, *5.11.2.2, positively driven*)*
X48:2	Überwachungsschalter Anschläge Fahrkorbdach Inspektionsbetrieb *Monitoring switch of stops car roof inspection operation*	Sicherheitsschalter gemäß EN 81-20: 2020, 5.11.2.2, zwangsöffnend*) *Safety contact according to EN 81-20:* 2020, *5.11.2.2, positively driven*)*

*) gemäß / *according to* EN 60947-5-1:2009

**) bezieht sich auf den Schutzraum im Schachtkopf bzw. in der Schachtgrube / *Refers to sufficient refuge space in the headroom or in the pit*

S2 Stecker / *Plug* Pin Nummer / *Number*	Funktion bewegliche Anschläge Schachtgrube**) *Function movable stops Schachtgrube**)*	Schalter Eigenschaft *Switch characteristic*
X47:4	Überwachungsschalter Anschläge Schachtgrube Normalbetrieb *Monitoring switch of stops pit normal operation*	Sicherheitsschalter gemäß EN 81-20: 2020, 5.11.2.2, zwangsöffnend*) *Safety contact according to EN 81-20:* 2020, *5.11.2.2, positively driven*)*
X47:3	Überwachungsschalter Anschläge Schachtgrube Inspektionsbetrieb *Monitoring switch of stops pit inspection operation*	Sicherheitsschalter gemäß EN 81-20: 2020, 5.11.2.2, zwangsöffnend*) *Safety contact according to EN 81-20:* 2020, *5.11.2.2, positively driven*)*

*) gemäß / *according to* EN 60947-5-1:2009

**) bezieht sich auf den Schutzraum im Schachtkopf bzw. in der Schachtgrube / *Refers to sufficient refuge space in the headroom or in the pit*

S2 Stecker / *Plug* Pin Nummer / *Number*	Funktion Reset Zugangskontrolle *Function Reset acess control*	Taster Eigenschaft *Push button characteristic*
X18:2	Reset Schlüsseltaster Zugangskontrolle Fahrkorbdach**) *Reset key-operated push-button of acess control car roof*	Taster / *Push button*)
X18:1	Reset Schlüsseltaster Zugangskontrolle Schachtgrube**) *Reset key-operated push-button of acess control pit*	Taster / *Push button*)
X48:5	Konfiguration Reset Zugangskontrolle***) *Konfiguration reset acess control***)*	Drahtbrücke / *Wired Jumper*

*) gemäß / *according to* EN 60947-5-1:2009

**) bezieht sich auf den Schutzraum im Schachtkopf bzw. in der Schachtgrube / *Refers to sufficient refuge space in the headroom or in the pit*

***) Bedeutung siehe Betriebsanleitung / *Meaning refer operating instructions*

TÜV AUSTRIA GMBH

TÜV-A-AT-1-23-0700-EUES – Anhang 1 / *Annex 1*

TÜV AUSTRIA

S2 Stecker / *Plug* Pin Nummer / *Number*	Funktion unbeabsichtigte Bewegung *Function unintended car movement*
X22:2	SHK-Abfrage-1, Eingang/ *Input*
X15:6	Nullleiter des Sicherheitskreises-In *Common of the connections to the safety chain-In*
X22:1	Nullleiter des Sicherheitskreises-Out *Common of the connections to the safety chain-Out*

1.3.2 Logik (Überwachungsgerät S2) / *Logic (monitoring device S2)*

S2 Stecker / *Plug* Pin Nummer / *Number*	Funktion Spannungsversorgung *Function supply voltage*
X1:2	0 V/ GND Spannungsversorgung / *Supply voltage*
X1:1	24 V Spannungsversorgung / *Supply voltage*
X1:3	Erde PE / *Earth PE*

S2 Stecker / *Plug* Pin Nummer / *Number*	Funktion sichere Sensorschnittstelle zur S2 *Function safe sensor interface to S2*
FSM-2 Stecker / *Plug* X25, Pin 4	24 V (extern/external)
FSM-2 Stecker / *Plug* X25, Pin 5&1	GND (extern/external)
X10:9	RS485-
X10:8	RS485+

S2 Stecker / *Plug* Pin Nummer / *Number*	Funktion CAN-Schnittstelle zur Steuerung FST-3 *Function CAN-Interface to lift controller FST-3*
X50:3/X10:13	CAN- High
X50:1/X10:14	CAN-Low
X50:2/X10:10	GND

1.3.3 Kombination von Aktoren samt Diagnosekanal / *Combination of actuators with diagnostic channel*

S2 Stecker / *Plug* Pin Nummer / *Number*	Funktion Aktor SHK *Function actuator SHK*	SHK-Relais Eigenschaft *SHK-relay characteristic*
Intern / *Internal* *(X14:8)*	SHK, Eingang/ *Input* SHK-Kontakt / *Contact*)*	AC 15 / 2A
X22:2	SHK, Ausgang / *Output* SHK-Kontakt / *Contact*)*	AC 15 / 2A

*) SHK-Relais muss unmittelbar auf die Geräte, die die Energiezufuhr zum Triebwerk und zur elektromechanischen Bremse steuern, wirken. An einer nicht überbrückbaren Stelle im Sicherheitskreis einzubinden und es ist die Betriebsanleitung einzuhalten.

SHK-relay shall act directly on the equipment controlling the supply to the machineand the electro-mechanical brake Engage in a non-bridgeable point in the safety circuit and *the conditions of the operating instructions* must be followed.

TÜV AUSTRIA GMBH

TÜV-A-AT-1-23-0700-EUES – Anhang 1 / *Annex 1*

S2 Stecker / *Plug* Pin Nummer / *Number*	Funktion Aktor SBR *Function actuator SBR*	SBR-Relais Eigenschaft *SBR-relay characteristic*
X26:2	SBR, Eingang/ *Input* SBR-Kontakt / *Contact*)*	AC 15 / 2A
X26:1	SBR, Ausgang / *Output* SBR-Kontakt / *Contact*)*	AC 15 / 2A

*) SBR-Relais muss unmittelbar auf die Energiezufuhr zum Bremselement gemäß EN 81-20:2014, 5.6.7 und/oder zur Blockiereinrichtung und/oder Auslöseeinrichtung, welche die Fangvorrichtung am Fahrkorb und/oder die Anhalteeinrichtung am Fahrkorb einrückt, wirken oder auf die Geräte, die die Energiezufuhr zum Bremselement gem. EN 81-20:2014, 5.6.7 und/oder zur Blockiereinrichtung und/oder Auslöseeinrichtung, welche die Fangvorrichtung am Fahrkorb und/oder die Anhalteeinrichtung am Fahrkorb einrückt, steuern, wirken. Ausführung abhängig von der Sicherheitsfunktion. An einer nicht überbrückbaren Stelle im Sicherheitskreis einzubinden und es ist die Betriebsanleitung einzuhalten.

SBR-relay shall act directly on the supply of the stopping device according to EN 81-20:2020, 5.6.7 and/or the blocking device and/or triggering device, which applies the car safety gear and/or the stopping gear on the car or shall act directly on the equipment controlling the supply to the stopping device according to EN 81-20:2020, 5.6.7 and/or the blocking device and/or triggering device, which applies the car safety gear and/or the stopping gear on the car. Implementation depending on the type of the safety function. Engage in a non-bridgeable point in the safety circuit and *the conditions of the operating instructions* must be followed.

S2 Stecker / *Plug* X633, Pin Nummer / *Number*	Funktion Aktor AUX *Function actuator AUX*	AUX-Relais Eigenschaft *AUX-relay characteristic*
X32:8	AUX, Eingang/ *Input* AUX-Kontakt / *Contact*)*	AC 15 / 2A
X15:2	AUX, Ausgang / *Output* AUX-Kontakt / *Contact*)*	AC 15 / 2A

*) Überbrückung der nach EN 81-20:2014, 5.12.1.6.1 d) angeführten Schalter
Overbriging of the switches listed according to EN 81-20:2014, 5.12.1.6.1 d)

S2 Stecker / *Plug* Pin Nummer / *Number*	Funktion Aktor Türüberbrückung DOOR *Function actuator door overbriging DOOR*	DOOR-Relais Eigenschaft *DOOR-relay characteristic*
X14:2	DOOR, Eingang / *Input* DOOR-Kontakt / *Contact*)*	AC 15 / 2A
Intern / *Internal* *(X14:8)*	DOOR, Ausgang / *Output* DOOR-Kontakt / *Contact*)*	AC 15 / 2A

*) Überbrückung der nicht geschlossenen und unverriegelten Türen / *Overbridging with doors not closed and locked*

S2 Stecker / *Plug* Pin Nummer / *Number*	Funktion Aktor EVAC *) *Function actuator EVAC *)*	SHK-Relais Eigenschaft *SHK-relay characteristic*
X26:2	EVAC, Eingang/ *Input* EVAC-Kontakt / *Contact*)*	AC 15 / 2A
X26:1	EVAC, Ausgang / *Output* EVAC-Kontakt / *Contact*)*	AC 15 / 2A

*) Optional: Zusatzfunktion schaltet synchron zu SHK-Aktor
Optional: Additional function switches synchronous to SHK-actuator

S2 Stecker / *Plug* Pin Nummer / *Number*	Funktion Aktor Türzone *Function actuator Doorzone*
X46:1	Ausgang Türzone / *Output Doorzone*)*
X46:2	Versorgung Türzone / *Supply Doorzone *)*

*) Nicht sicherheitsrelevant / *not safety relevant*

TÜV AUSTRIA GMBH TÜV AUSTRIA

TÜV-A-AT-1-23-0700-EUES – Anhang 1 / *Annex 1*

TÜV AUSTRIA

S2 Stecker / *Plug* Pin Nummer / *Number*	Funktion Diagnose mechanische Anhalteeinrichtung*) *Function diagnostic of mechanical device for stopping*)*	Schalter Eigenschaft *Switch characteristic*
X48:4	Rückmeldeschalter der mechanischen Anhalteeinrichtung *Feedback switch of mechanical device for stopping*	Schalter, zwangsöffnend**) *Switch, positively driven**)*

*) Bremselement gemäß. EN 81-20:2020, 5.6.7, Fangvorrichtung am Fahrkorb und/oder die Anhalteeinrichtung am Fahrkorb. Ausführung abhängig von der Sicherheitsfunktion. Es ist die Betriebsanleitung einzuhalten.

Stopping device according to EN 81-20:2020, 5.6.7, the car safety gear and/or the stopping gear on the car. Implementation depending on the type of the safety function. The conditions of the operating instructions must be followed.

**) gemäß / *according to* EN 60947-5-1:2009

S2 Stecker / *Plug* Pin Nummer / *Number*	Funktion Diagnoseinformationen *) *Function diagnostic of informations *)*	Eigenschaft *Characteristic*
X15:1	Abgriffe der elektrischen Sicherheitskette nur für Informationszwecke / *only gathering informations of the electric safety chain*	Optionale Abfrage / *Optional gathering*
X14:1 X32:4	Abgriffe der elektrischen Sicherheitskette nur für Informationszwecke / *only gathering informations of the electric safety chain*	Nothalt Fahrkorb / *Emercency stop car*
X14:2	Abgriffe der elektrischen Sicherheitskette nur für Informationszwecke / *only gathering informations of the electric safety chain*	Nothalt Schacht / *Emercency stop shaft*
X14:3 X32:3	Abgriffe der elektrischen Sicherheitskette nur für Informationszwecke / *only gathering informations of the electric safety chain*	Fahrkorb Tür C / *Car door C*
X14:4 X32:2	Abgriffe der elektrischen Sicherheitskette nur für Informationszwecke / *only gathering informations of the electric safety chain*	Fahrkorb Tür B / *Car door B*
X14:5 X32:1	Abgriffe der elektrischen Sicherheitskette nur für Informationszwecke / *only gathering informations of the electric safety chain*	Fahrkorb Tür A / *Car door A*
X14:6	Abgriffe der elektrischen Sicherheitskette nur für Informationszwecke / *only gathering informations of the electric safety chain*	Sperrmittel A / *Locking A*
X14:7	Abgriffe der elektrischen Sicherheitskette nur für Informationszwecke / *only gathering informations of the electric safety chain*	Sperrmittel B / *Locking B*
X15:5/X15:3/X15:4 X32:7/X32:5/X32:6 X32:9	Sicherheitskreis Eingang / *Input safety chain* Sicherheitskreis Ausgang / *Output safety chain* Nullleiter des Sicherheitskreises-Out / *Common of the connections to the safety chain-Out*	230 VAC / 2A

*) Nicht sicherheitsrelevant, dient als Information für die Steuerung FST-3 und als Anschluss der Sicherheitskette.
Not safety relevant, serves as Information for the controller FST-3 and as wiring of the safety chain.

2. Bedingungen und Voraussetzungen / *Conditions and Preconditions*

2.1 Max. Länge des Hängekabels / *max. length of travelling cable:* 160 m

2.2 Max. Auslösegeschwindigkeit / *max. tripping speed:* 10,0 m/s

2.3 Max. Haltestellen / *max. landings:* 64*)

*) bezieht sich auf die eingelernten Türzonen / *Refers to the learned door zones*

TÜV AUSTRIA GMBH

TÜV-A-AT-1-23-0700-EUES – Anhang 1 / *Annex 1*

2.4 Versorgungsspannung S2 & Sensoren / *Supply voltage of S2 & sensors*: 24 VDC ±10% / 1A

Die 24 VDC Versorgungsspannung muss PELV gemäß EN 60950-1:2013 entsprechen.
The 24 VDC supply voltage must follow the requirements for PELV according to EN 60950-1:2013.

2.5 Überspannungskategorie / *Over voltage category*: III

2.6 Isolierstoffgruppe / *Isolation material group*: III

2.7 Inhomogenes Feld / *Inhomogeneous field*

2.8 Verschmutzungsgrad / *Degree of pollution*: 3

2.9 S2 Schutzgrad / *Degree of protection:*
IP 10, eingebaut im geschützten und geerdeten Gehäuse ≥ IP2X
IP 10, *installed in a protected and grounded housing ≥ IP2X*

2.10 Spannung Stromkreis / *Voltage of the safety chain*, SHK, EVAC, AUX, DOOR & SBR *circuit*: max. 230V / 50Hz

2.11 Überlast-, Kurzschlussschutz des Stromkreises der Sicherheitskette: 2 A
Overload, short cut circuit protection of the safety chain:

2.12 Türzone / *Door zone (*X46:1/2*)*: 24VDC, max. 0,1A

2.13 Betriebstemperatur / *Operating temperature:* -10°C bis / *to* 65 °C

2.14 Lager- und Transporttemperatur / *Storage and transport temperature*: -20°C bis / *to* 70°C

2.15 Relative Luftfeuchte Betrieb: ≤ 95%, ohne Kondensation
Relative humidity operating: ≤ 95%, *without condensation*

2.16 Relative Luftfeuchte Lagerung: ≤ 100%, ohne Kondensation
Relative humidity storage: ≤ 100%, *without condensation*

2.17 Luftdruck / *Air pressure*: 1013 hPa bis / *to* 800 hPa bis / *up to* 2000 m über / *above* NN

2.18 Identifikation der Platinen S2 / *Identification number of PCB´s of S2:*
6-01-10-S2-SHK V6, 6-01-10-S2-CPU V8
Hardwareversionsnummer / *Hardware version number* S2: v1.02
Softwareversionsnummer / *Software version number* S2: V2.200-0022
Softwaresignatur / *Software signature* S2: 0x67EC4006

2.19 Identifikation Platine des LIMAX33 Red / *Identification PCB of LIMAX33 Red*: LIMAX2-RED.00.1
Hardwareversionsnummer LIMAX33 Red / *Hardware version number LIMAX33 Red:* 00.1-4
Softwareversionsnummer LIMAX33 Red / *Software version number LIMAX33 Red:* v1.1
Softwaresignatur LIMAX33 Red / *Software signature LIMAX33 Red:* 0x0A2FBDAE

2.20 Proof-Test-Intervall / *Proof-Test-Interval:* 20 Jahre / 20 *years*

2.21 Zonenlänge / *Zone length*: max. ± 200 mm

2.22 Elektrische Leitungen: siehe Montage-, Inbetriebnahme-und Prüfanleitung
Electric wiring: see assembly-, commissioning- and testinstruction

2.23 Kabellänge & Verlegung zur S2: siehe Montage-, Inbetriebnahme-und Prüfanleitung, geschützte Verlegung
Cable length & installation to S2: see assembly-, commissioning- and testinstruction, protected installation

TÜV AUSTRIA GMBH

TÜV-A-AT-1-23-0700-EUES – Anhang 1 / *Annex 1*

TÜV AUSTRIA

2.24 Elektromagnetische Verträglichkeit / *Electromagnetic compatibility*: EN 12015:2020 / EN 12016:2013

2.25 Vibrationsfestigkeit / *Vibration resistance:* EN 81-50:2020, 5.6.3.1

2.26 Bei Anwendung der Sicherheitsfunktion „Verzögerungskontrolle" ist nach Auslösen eine anlagen-spezifische Bremsverzögerung erforderlich, um die Anforderungen der EN 81-20:2020 zu erfüllen. Auf die Bedingungen des Abschnitts 10.2, Fußnote 3 wird verwiesen.

For application of the safety function "Check on retardation" a braking deceleration specifically for this lift is required after tripping, to meet the requirements of EN 81-20:2020. Reference is made to the conditions in section 10.2, footnote 3.

2.27 Die beidseitig wirkende Fangvorrichtung des Fahrkorbes für Auf- und Abwärtsrichtung muss den Anforderungen der EN 81-20:2020 genügen.

The bi-directional acting safety gear of the car for the up and down direction must meet the requirements of EN 81-20:2020.

2.28 Die Anhalteeinrichtung am Fahrkorb für Auf- und Abwärtsrichtung muss den Anforderungen der EN 81-21:2022 genügen.

The stopping gear on the car *for the up and down direction* must meet *the requirements of EN 81-21:2022.*

2.29 Das Bremselement für die Auf- und Abwärtsrichtung gemäß 5.6.7 der EN 81-20:2020 muss den Anforderungen der EN 81-20:2020 genügen.

The stopping element for the up and down direction according clause 5.6.7 of EN 81-20:2020 must meet the requirements of EN 81-20:2020.

2.30 Um Kurzschlüsse zwischen dem 24V-Anschlusssignal der Sicherheitssensoren des S2 Systems und benachbarten Stromkreisen auszuschließen, sind die Anforderungen gemäß *EN 81-20:2020* Abschnitt *5.10.3.2.2* für die Abtrennung der beiden Systeme zu erfüllen.

To prevent any shortcut between the 24V connector signal of the safety sensors of the S2 system and adjacent circuits, the requirements of EN 81-20:2020 clause 5.10.3.2.2 for the separation of the two systems must be met.

2.31 Diagnosetestintervall / *Diagnostic-Test-Interval*:

Bei jeder Zustandsänderung, längstens jedoch 25 Stunden (SHK, EVAC, AUX & DOOR) und 13 Monate (SBR).

At the next operating sequence, but not later than 25 hours (SHK, EVAC, AUX & DOOR) and 13 months (SBR).

2.32 Manueller Wiederanlauf / *Manual restart:*

Nach dem Auslösen einer Sicherheitsfunktion muss der sichere Zustand aufrechterhalten bleiben, bis der sichere Zustand für einen Wiederanlauf gegeben ist oder bis der sichere Zustand für einen Wiederanlauf gegeben ist und die manuelle Rückstelleinrichtung (Quitierfunktion) betätigt wurde.

After the triggering of a safety function, the system must remain held in a secure state until a safe state is performed for a restart or the system must remain held in a secure state until a safe state and a manual reset is performed (Reset function) for a restart.

TÜV AUSTRIA GMBH

TÜV-A-AT-1-23-0700-EUES – Anhang 1 / *Annex 1*

TÜV AUSTRIA

2.33 Die entsprechenden LIMAX33 RED Grenzwerte und dessen Installations-, Betriebs- und Wartungsrichtlinien sind einzuhalten.

All relevant LIMAX33 RED limits and its installation, operating and maintenance guidelines shall be followed.

2.34 Fangvorrichtungen dürfen nicht durch elektrische, hydraulische oder pneumatische Einrichtungen eingerückt werden.

Safety gears shall not be tripped by devices, which operate electrically, hydraulically or pneumatically.

2.35 Systematischer Ausfall / *Systematic failure:*

Grundlegende und bewährte Sicherheitsprinzipien, bewährte Bauteile, Maßnahmen zur Beherrschung systematischer Ausfälle, Maßnahmen zur Vermeidung systematischer Ausfälle (Organisation, Management und Technik) und Maßnahmen zur Vermeidung systematischer Ausfälle während der Integration (Organisation, Management und Technik) sind anzuwenden.

Basic and proven safety principles, proven components, measures to *control systematic failures,* measures to avoid *systematic failures (organization,* management and technology) and measures to *avoid systematic failures during the integration (organization,* management and technology) are applied.

2.36 Alle genannten Sicherheitsfunktionen können ihr Sicherheitsniveau nur dann erreichen, wenn die zugehörige Hardwareumgebung mindestens denselben Anforderungen des jeweiligen Sicherheitsniveaus genügt.

All the described safety functions can just achieve their safety level, if the associated hardware environment meets at least the same requirements of each safety level.

2.37 Die Baumusterprüfbescheinigung, die Konformitätserklärung und die Montage-, Inbetriebnahme-und Prüfanleitung sind der Anlagendokumentation beizulegen. Diese Dokumente dienen zur Prüfung vor der Inbetriebnahme, zur wiederkehrenden Prüfung, Prüfung nach wesentlichen Änderungen und nach einem Unfall.

The certificate of type examination, the declaration of conformity and the assembly-, commissioning- and testinstruction shall be enclosed to the system documentation. These documents are used for examinations and tests before putting into service, for periodical examinations and tests, examinations and tests after an important modification or after an accident.

3. Anmerkungen und Hinweise / *Remarks and advices*

3.1 Folgende, sicherheitsbezogene und nicht sicherheitsbezogene Anwendungen wurden analysiert und realisiert. Anhand von Gefahrenanalysen und anschließender Gefahrenbewertungen wurden die notwendigen Schutzniveaus ermittelt und durch die entsprechenden Spezifikationen erreicht.

The following safety-related and non-safety-related-applications have been analyzed and implemented. The required safety protection levels have been identified by risk analysis and subsequent risk assessments based on the appropriate specifications.

Nr.	Sicherheitsrelevante Funktionen / nicht sicherheitsrelevante Funktionen *Safety-related-functions / non-safety-related-function*	Normhinweise in den Abschnitten der *Normative references in the clauses of the* *EN 81-20 :2020 / EN 81-21:2022*	Ausgänge *Output*	SIL gemäß EN 81-20:2020 Systemreaktionszeit *SIL according to EN 81-20:2020 System reaction time[ms]*
1	Übergeschwindigkeit (Vorauslösung) *Overspeed (pre-tripping)* [1)]	EN 81-20: 5.6.2.2.1.6 a)	SHK	2 69 ms

TÜV AUSTRIA GMBH TÜV AUSTRIA

TÜV-A-AT-1-23-0700-EUES – Anhang 1 / *Annex 1*

TÜV AUSTRIA

2	Übergeschwindigkeit (Auslösung) *Overspeed (tripping)* [2]	EN 81-20: 5.6.2.2.1.1 a)	SHK & SBR	3 69 ms
3	Verzögerungskontrolle *Check on retardation* [3]	EN 81-20: 5.12.1.3	SHK	3 69 ms
4	Notendschalter *Final limit switches* [4]	EN 81-20: 5.12.2.3.1 b)	SHK & DOOR	1 69 ms
5	Türüberbrückung *Door overbridging* [5]	EN 81-20: 5.12.1.4 a), b), c)2), d)	DOOR	2 69 ms
6	Inspektionsendschalter bei kurzen Schachtkopf und Grube *Inspection additional limit switches with reduced headroom / pit* [6]	EN 81-21: 5.5.3.4, 5.7.3.4	SHK	2 69 ms
7	Unbeabsichtigte Bewegung *Unintended car movement*	EN 81-20: 5.6.7.7, 5.6.7.8	SBR / SHK [7]	2 89 ms
8	Zugangstürüberwachung Fahrkorbdach und/oder Schachtgrube *Be operated when any acess to the car roof and/or pit is opened*	EN 81-21: 5.5.3.1 EN 81-21: 5.7.3.1	SHK	3 125 ms
9	Rückstellen der Zugangstürüberwachung *Resetting the acess control*	EN 81-21: 5.5.3.2 EN 81-21: 5.7.3.2	SHK [8]	2 125 ms
10	Vorausgelöstes Anhaltesystem Schachtkopf und/oder Schachtgrube *Pre-triggered stopping system fort he headroom and/or the pit*	EN 81-21: 5.5.2.3.1 EN 81-21: 5.7.2.3.1	SHK & SBR	3 169 ms
11	Verlust der Treibfähigkeit *Loss of traction*	Kein Normverweis *No normative reference*	SHK & SBR	1 max. 1249 ms
12	Verhinderung des Normalbetriebs während Bypass *Preventing the normal operations during bypass*	EN 81-20: 5.12.1.8.3 f)	SHK	3 125 ms
13	Inspektionsschalter / *Inspection operation switch*	EN 81-20: 5.12.1.5.1.2 a)	AUX & DOOR	3 125 ms
14	Überwachung der Inspektionstaster *Check of push buttons in conjunction with inspection operation*	EN 81-20: 5.12.1.5.2.3 b)	SHK	1 169 ms
15	Rückholschalter / *Emergency electrical operation switch*	EN 81-20: 5.12.1.6.1	SHK&AUX	3 169 ms
16	Mechanische Einrichtung (bewegliche Anschläge) *Pawl device (movable stops)*	EN 81-20: 5.2.6.4.3.1 b) EN 81-20: 5.2.6.4.4.1 e), f) EN 81-21: 5.5.2.6 EN 81-21: 5.7.2.6	SHK	3 125 ms
17	Temporärer Schutzraum im Schachtkopf und/oder Schachtgrube *Temporäry sufficient refuge space for the headroom and/or pit*	EN 81-21: 5.5.2.5.3 EN 81-21: 5.7.2.5.3 EN 81-20: kein Normverweis / *No normative reference*	SBR	1 1500 ms [9] +125 ms
18	Beschleunigungsüberwachung (6m/s²) *Check of acceleration (6 m/s²)*	Kein Normverweis *No normative reference*	SHK & SBR	2 169 ms

TÜV AUSTRIA GMBH

TÜV-A-AT-1-23-0700-EUES – Anhang 1 / *Annex 1*

TÜV AUSTRIA

19	Überwachung von Inspektions- und Rückholgeschwindigkeit (0,63m/s bzw. 0,3m/s) *Check of speed of inspection operation and emergency electrical operation (0,63m/s or respectively 0,3m/s)*	EN 81-20: 5.12.1.5.2.1 e) EN 81-20: 5.12.1.6.1 f)	SHK	3 169 ms
20	Montagemodus verhindert Normalbetrieb *Installation modus prevents normal operation*	Kein Normverweis *No normative reference*	SHK	3 125 ms

[1] ... Übergeschwindigkeit (Vorauslösung) entspricht 92% der Auslösegeschwindigkeit
Overspeed (pre-tripping) corresponds to 92% of the tripping speed

[2] ... Einstellbare Auslösegeschwindigkeit (nur mit Freischaltcode)
Adjustable tripping speed (only with activation code)

[3] ... Einstellbare Verzögerung (nur mit Freischaltcode)
Adjustable retardation (only with activation code)

Bei Anwendung der Sicherheitsfunktion „Verzögerungskontrolle" sind zusätzlich die folgenden Anforderungen zu erfüllen:

For application of the safety function "Check on retardation" the following requirements have to be met:

a. Puffer müssen für eine Nenngeschwindigkeit von mindestens 1,25 m/s ausgelegt sein.
The buffers shall be designed for a rated speed of at least 1,25 m/s.

b. Falls die Puffer auf eine Nenngeschwindigkeit ≤ 2,5 m/s ausgelegt werden, gilt:
If the buffer is designed for a rated speed ≤2.5 m / s, the following applies:

- Folgende S2-Sicherheitsfunktionen sind obligatorisch / *S2 safety functions are obligatory:*
  - Überwachung der Rückholgeschwindigkeit
    Check of emergency electrical operation speed
  - Beschleunigungsüberwachung / *Check of acceleration*

  Es muss außerdem sichergestellt werden, dass bei Notbefreiung die Nenngeschwindigkeit der Puffer nicht überschritten werden kann. Ein entsprechender Ablauf wird in der Betriebsanleitung angegeben.

  It must also be ensured that the rated speed of the buffers is not exceeded at the rescue operations. A corresponding procedure is specified in the operating instructions.

- Die Mindestnenngeschwindigkeit für die Puffer gemäß a) stellt einen Anwendungsgrenzwert für das gegenständliche „elektrische, elektronische sowie programmierbare System für sicherheitsbezogene Anwendungen für Aufzüge" dar. Ob von der Anforderung einer Nenngeschwindigkeit größer 2,5 m/s sowie einem Pufferhub von mindestens 0,42 m, beides gemäß EN 81-20:2020, 5.8.2.2.2, abgewichen werden darf, ist anlagenbezogen durch den Montagebetrieb in Abstimmung mit jener notifizierten Stelle für Aufzüge zu betrachten und zu beurteilen, die in das Konformitätsbewertungsverfahren der Aufzugsanlage eingebunden ist.

TÜV AUSTRIA GMBH TÜV AUSTRIA

TÜV-A-AT-1-23-0700-EUES – Anhang 1 / *Annex 1*

TÜV AUSTRIA

The minimum rated speed for the buffers according to a) represents an application limit for the "electrical, electronic and programmable system for safety-related applications for lifts" in question. Whether a deviation from the requirement of a nominal speed of more than 2.5 m/s and a buffer stroke of at least 0.42 m, both according to EN 81-20:2020, 5.8.2.2.2, is permitted shall be considered and assessed by the installer in coordination with the notified body for lifts involved in the conformity assessment procedure of the lift installation.

4)... Einstellbare Endschalter, deren Positionen werden im Zuge der Inbetriebnahme gelernt.
Adjustable limit switch, whose positions are learned during the commissioning

5)... Einstellbare Haltestellen, deren Positionen werden im Zuge der Inbetriebnahme gelernt.
Adjustable landings, whose positions are learned during the commissioning

6)... Einstellbare Inspektionsendschalter, deren Positionen werden im Zuge der Inbetriebnahme gelernt.

Adjustable additional limit switch of the inspection, whose positions are learned during the commissioning

7)... Der Aktor kann entweder über das SHK- oder das SBR-Relais ausgelöst werden. Falls die Antriebsbremse als Aktor benutzt wird, muss die Überwachung nach EN 81-20:2020, 5.6.7.8 extern erfolgen.

The actuator can be triggered either via the SHK- or SBR-relay. If the machine brake is used as an actuator, monitoring according to EN 81-20:2020 5.6.7.8 must be carried out externally.

8)... Indirekt über Sicherheitsfunktion „Zugangstürüberwachung Fahrkorbdach und/oder Schachtgrube"
Indirectly via safety function "Be operated when any acess to the car roof and/or pit is opened"

9)... 1500 ms beabsichtigte Verzögerung / *Intended delay*

3.2 Prüfgrundlagen / *Base of examination*:

EN 81-20:2020, 5.6.2.2.1.6 a), 5.6.2.2.1.1 a), 5.12.1.3, 5.12.2.3.1 b), 5.12.1.4 a), b), c)2), d), 5.6.7.7, 5.6.7.8, 5.11.2.1.2, 5.11.2.3.2, 5.11.2.3.3, 5.12.1.8.3 f), 5.12.1.5.1.2 a), 5.12.1.5.2.3 b), 5.12.1.6.1, 5.2.6.4.3.1 b), 5.2.6.4.4.1 e), f), 5.12.1.5.2.1 e), 5.12.1.6.1 f)

EN 81-21:2022, 5.5.2.3.1, 5.5.2.6, 5.5.2.5.3, 5.5.3.1, 5.5.3.2, 5.5.3.4, 5.7.2.3.1, 5.7.2.5.3, 5.7.2.6, 5.7.3.1, 5.7.3.2, 5.7.3.

3.3 Am Bauteil muss ein Schild mit folgenden Angaben zur Identifikation angebracht sein:
For identification, a label must be placed on the device, indicating the following:

- Herstellerangaben / *Manufacturers data* (*)
- Typenbezeichnung / *Type*
- Baumusterprüfkennzeichen / *Type examination certificate number*

(*) Herstellerangaben entsprechend Europäische Richtlinie für Aufzüge 2014/33/EU, Artikel 8 (6)
Manufacturers data according European Directive for Lifts 2014/33/EU, Article 8 (6).

3.4 Diese Bescheinigung darf nur im Ganzen und mit den Unterlagen nach Punkt 4 dieses Anhangs 1 zur Bescheinigung verbreitet werden.

This type examination certificate must be spread just together with all documents according clause 4 of this annex 1 to the type examination certificate.

3.5 Änderungen der Einrichtung sind der ausstellenden Stelle schriftlich mitzuteilen. Diese entscheidet, ob und in welchem Umfang Ergänzungsprüfungen des geänderten Prüfgegenstands erforderlich werden.

Modification of the device must be reported to the issuing body in written. It is in its decision, if and in which scope any modification makes additional tests necessary.

3.6 Die vergebene Bescheinigungsnummer darf nicht für andere Produkte verwendet werden, die nicht mit dem geprüften Produkt übereinstimmen.

This type examination number must not be used for any other products, which are not fully in compliance with the tested product.

3.7 Diese Bescheinigung beruht auf dem Stand der Technik, der durch die zurzeit gültigen harmonisierten Normen dokumentiert wird. Bei Änderungen bzw. Ergänzungen dieser Normen bzw. bei Weiterentwicklung des Stands der Technik kann eine Überarbeitung dieser Bescheinigung notwendig werden.

This certificate is based on the technical state of the art, represented by the harmonized standards available and presently in force. Modification(s) and/or amendment(s) of these standards respectively future development of the technical state of the art may make a revision of this certificate necessary.

3.8 Voraussetzung des Einsatzes dieser Einrichtung ist unter anderem, dass diese im Rahmen ihres Inverkehrbringens als Sicherheitsbauteil nach Europäischer Richtlinie für Aufzüge 2014/33/EU die für das Inverkehrbringen von Sicherheitsbauteilen geltenden Bedingungen der Richtlinie 2014/33/EU, Artikel 15 (Überwachung der Produktion) eingehalten werden. Dies, um sicherzustellen, dass die inverkehrgebrachten Einrichtungen mit dem geprüften Muster bzw. den geprüften Mustern übereinstimmen.

Die möglichen Verfahren zur Überwachung der Produktion der Einrichtung sind:

- Stichprobenartige Überwachung der Produktion (Europäische Richtlinie für Aufzüge 2014/33/EU, Anhang IX, Modul C 2).
- Qualitätssicherungssystem zur Produktionsüberwachung (Europäische Richtlinie für Aufzüge 2014/33/EU, Anhang VI, Modul E).

Precondition for application of this device is, beside others, that the requirements for placing the product on the market according European Directive for Lifts 2014/33/EU are kept for the device according European Directive for Lifts 2014/33/EU, Article 15 (surveillance of production). This is to assure, that the products, placed on the market are in compliance with the tested sample/(s).

The possible procedures for surveillance of production of the device are:

- *Conformity to type with random checking (European Directive for Lifts 2014/33/EU, Annex IX, Mod. C 2).*
- *Product quality assurance (European Directive for Lifts 2014/33/EU, Annex VI, Module E).*

3.9 Die Gültigkeit der Bescheinigung erlischt automatisch mit Eintritt mindestens eines der Kriterien:
The validity of this certificate expires automatically upon occurrence of at least one of the criteria:

- Mit Streichung der EN 81-20:2020 oder der EN 81-50:2020 aus der Liste der harmonisierten Normen für Aufzüge und Sicherheitsbauteile für Aufzüge zur Unterstützung der Richtlinie 2014/33/EU des Europäischen Parlaments und des Rates.

  With deletion of EN 81-20:2020 or EN 81-50:2020 from the list of harmonised standards for lifts and safety components for lifts drafted in support of Directive 2014/33/EU of the European Parliament and of the Council.

- Mit Zurückziehung der EN 81-21:2022. / *With the withdrawal of EN 81-21:2022.*

TÜV-A-AT-1-23-0700-EUES – Anhang 1 / *Annex 1*

4. Bilder, Diagramme, Skizzen, Zeichnungen / *Pictures, diagrams, sketches, drawings*

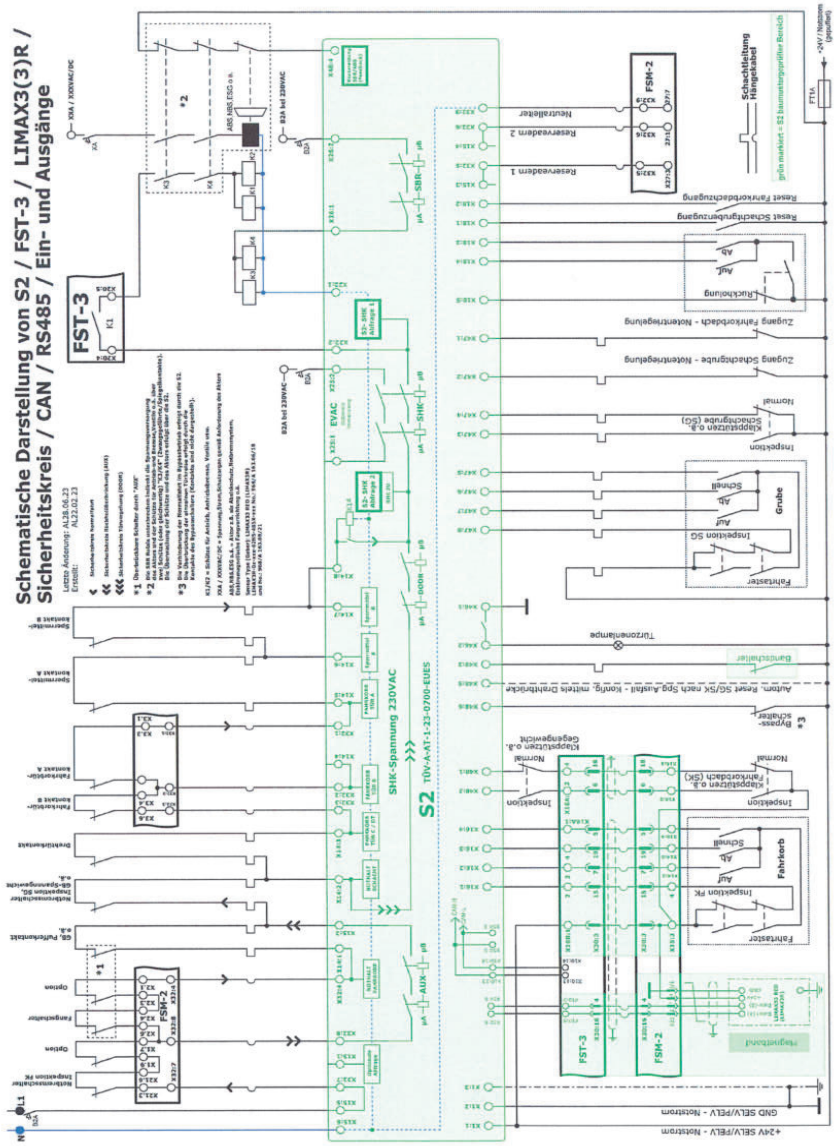

Index

A

B

C

D

E

F

G

I

J

K

L

T

U

NOTES

NOTES

NEWLIFT
NEUE ELEKTRONISCHE WEGE

NEW LIFT Neue Elektronische Wege
Steuerungsbau GmbH
Lochhamer Schlag 8
DE 82166 Gräfelfing

+49 (0) 89 898 66 0
+49 (0) 89 898 66 300
info@newlift.de
www.newlift.de

NEW LIFT
Service Center GmbH
Ruwerstraße 16
DE 54427 Kell am See

+49 (0) 6589 919 540
+49 (0) 6589 919 540 300
info@newlift-sc.de
www.newlift.de