MANUAL

NEWLIFT
NEUE ELEKTRONISCHE WEGE

UCM - A3

Monitoring of Unintended Car Movements
with the Car Door Open

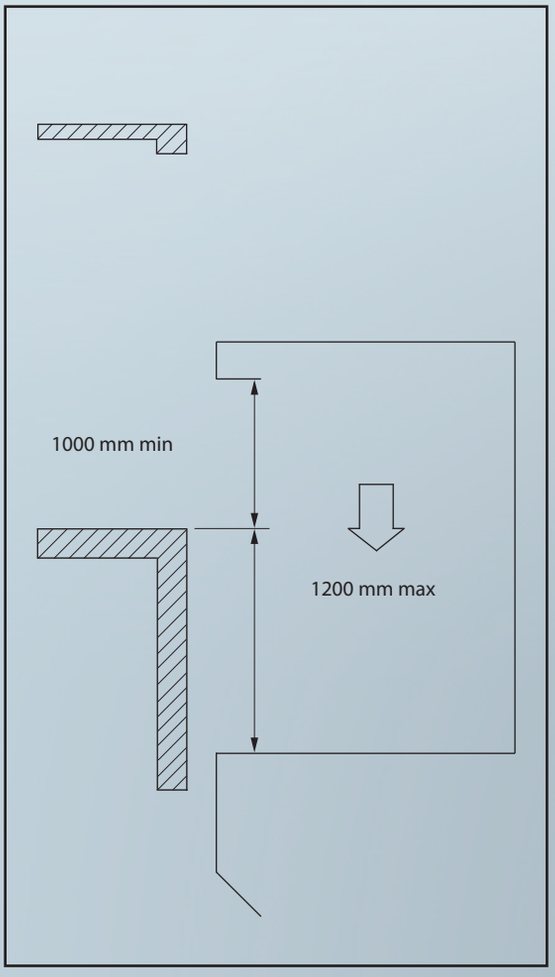

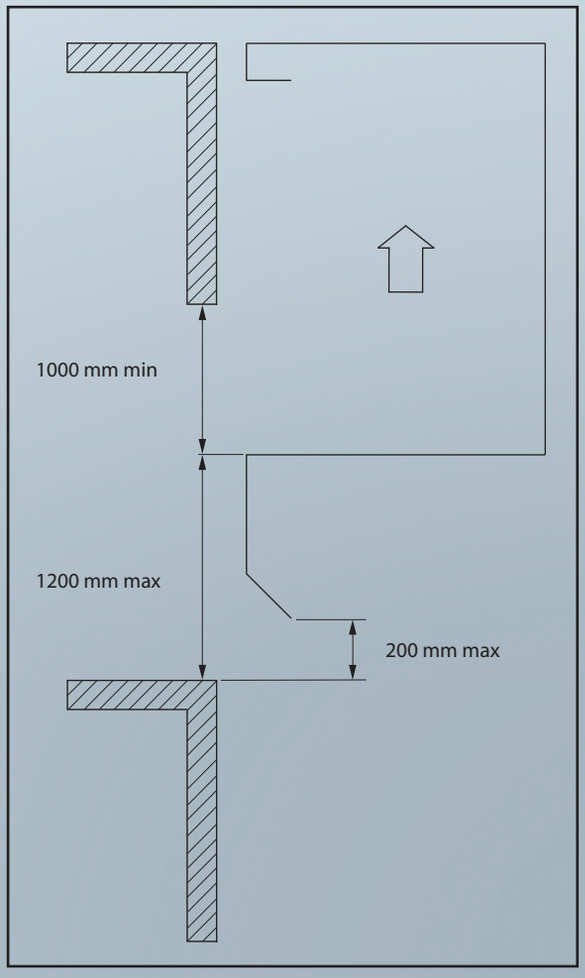

Manufacturer

NEW *LIFT* Steuerungsbau GmbH
Lochhamer Schlag 8
82166 Gräfelfing
Tel +49 89 – 898 66 – 0
Fax +49 89 – 898 66 – 300
Mail info@newlift.de
www.newlift.de

Service line

Tel +49 89 – 898 66 – 110
Mail service@newlift.de

Date of issue 06.04.2012

Author HW/TB/AL/SWB

Last Change 19.11.2020 AME

Release 19.11.2020 AL

Doc. No. hb_UCM_2020-09_en

Contents

1 General

For lifts in accordance with EN 81-1/2:1998 + A3:2009 and EN 81-20/50:2014, equipment is required that can engage in case of excessive speed in the upward or downward direction, and stop the car and keep it at a standstill. This equipment must only then respond if the car has reached a speed that is higher than the nominal speed.

If a car moves away uncontrolled from a floor, there is a risk that persons could either get caught between car threshold and door transom of the shaft door, or between the car roof and shaft door threshold, and sustain severe injuries. As a result of the requirements posed by the EN 81-1/2 and EN 81-20/50, accidents of this kind should be prevented.

Among other things, EN81-1/2:1998 + A3:2009 Item 9.11 / 9.13 and EN 81-20/50:2014 5.6.7. requires a protective device to prevent unintended car movements when the car door is open (UCM - A3). Lift control system FST-2 includes the detection of unintended car movement and safe shutdown off of a downstream actuator.

1.1 Abbreviations, characters and symbols used

Symbol / abbreviation	Meaning
UCM	unintended car movement
✶	**Delivery condition** Settings that are supplied as standard are marked with an asterisk ✶.
▶	**Operational instructions** Perform the tasks that follow this symbol in the specified order.
⚠	***Warning notice*** This symbol is located in front of safety-relevant information
ⓘ	***Information notice*** This symbol is located in front of relevant information.

1.2 Notation

Notation	Meaning
Bold	› Designations of switches and actuators › Input values
Italics	› Captions › Cross references › Designations of functions and signals › Product names
Bold italics	› Remarks
LCD font	› System messages of the controller

1.3 Further information

The following documents, among others, are available for the FST control system and its components:

› FST Installation & Commissioning Manual
› FST manual
› ADM manual
› EAZ TFT.45.110.210 manual
› EAZ-256 manual
› EN81-20 manual
› FPM manual
› Update-Backup-Analysis manual
› FST-2XT MRL manual
› GST-XT manual
› LCS manual
› RIO manual
› SAM manual

These and other up to date manuals can be found in the download area of our website at https://www.newlift.de/downloads-311.html

1.4 How to contact us

If, after referring to this manual, you still require assistance, our service line is there for you:

Phone	+49 89 – 898 66 – 110
E-mail	service@newlift.de
Mon. - Thurs.:	8:00 a.m. – 12:00 p.m. and 1:00 p.m. – 5:00 p.m.
Fr:	8:00 a.m. – 3:00 p.m.

2 Safety

2.1 General safety regulations

The electronic components must only be operated in perfect working condition in a proper manner, safely and in compliance with the instructions, the valid accident prevention regulations and the guidelines of the local power company.

The safety guidelines of the FST manual and the FST Installation and Commissioning manual apply for this product.

2.2 Applicable standards and guidelines

› DIN EN 81 part 1 and 2:
the safety guidelines for the construction and installation of passenger and goods lifts

› DIN EN 81-20/50:2014

› DIN VDE 0100
the conditions for the erection of high voltage installations with nominal voltages up to 1 kV

› VDE 0106
the contact protection measures in the machine room

› ZH 1/312 - BGI 779
the data sheet on safety measures for the installation, maintenance and commissioning of lift systems

› EN 12015:2014
Electromagnetic compatibility – Product family standard for lifts, escalators and moving ways – emitted interference

› EN 12016:2013
Electromagnetic compatibility – Product family standard for lifts, escalators and moving ways – immunity

› EN 61000-4-2:2009
Electromagnetic compatibility (EMC) - part 4-2: test and measurement methods - Immunity test to electrostatic discharge

› EN 61000-4-3:2011
Electromagnetic compatibility (EMC) - part 4-3: test and measurement methods - Immunity test to high frequency electromagnetic fields

› EN 61000-4-4:2012
Electromagnetic compatibility (EMC) - part 4-4: test and measurement methods - Immunity test to fast transient disturbances/burst

› EN 61000-4-5:2014
Electromagnetic compatibility (EMC) - part 4-5: test and measurement methods - Immunity test to surge voltages

› EN 55011:2009+A1:2010
Industrial, scientific and medical equipment - radio interference - limit values and methods of measurement

2.3 Handling electronic assemblies

Electrostatic charge

- ► Keep the electronic assembly in its original packaging until installation.
- ► Before opening the original packaging, a static discharge must be performed. To do this, touch a grounded piece of metal.
- ► During work on electronic assemblies, periodically perform this discharge procedure.
- ► All bus inputs and outputs that are not in use must be equipped with a terminator.

3 Implementation for hydraulic installations

The protective device always consists of at least three components:

1.) Sensor: registers the unintended car movement with the car door open

2.) Controller: activates the actuator to stop the car in the event of an error

3.) Actuator: stops the car in the event of an error

With the safety circuit bypass control of the FST-2XT/XTs, both the sensor and the controller of the protective device can be put into effect.

3.1 UCM actuators

3.1.1 UCM actuator: shutoff valve

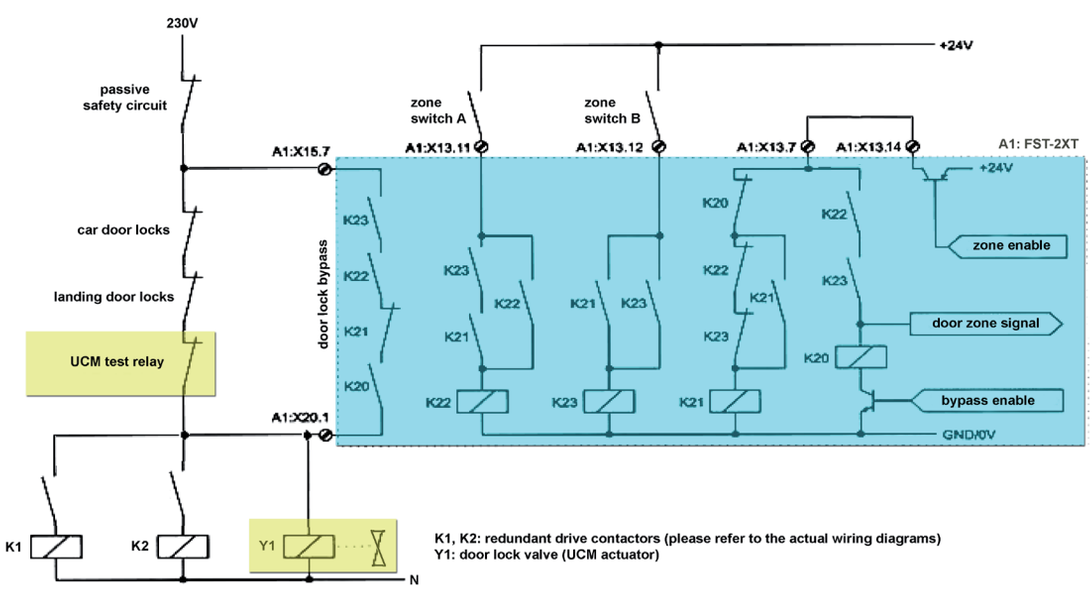

3.1.2 UCM actuator: redundant lowering valves

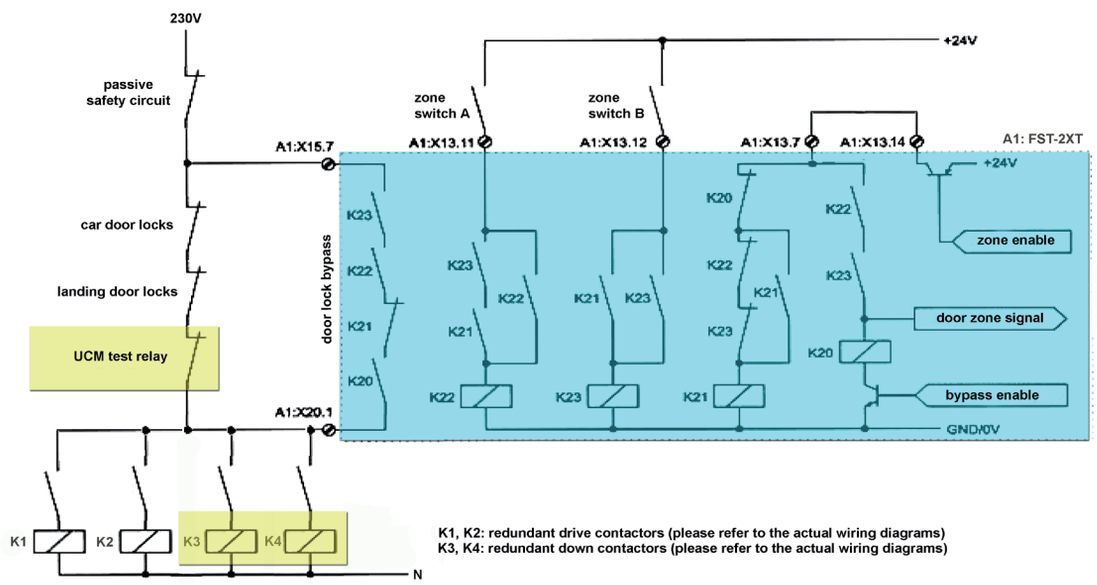

3.2 General description of the available functions

The safety circuit bypass control, depicted in the right section of the block wiring diagrams, ensures the safe bypassing of the car door contacts and shaft door contacts within the door zone, via two independent door zone switches. Conversely, it ensures safe shutdown of the downstream drive components and the UCM actuator upon exiting the door zone with the car door open.

In order to adhere to the permissible total stopping distance in case of UCM, the size of the door zone must be limited depending on the installation. To do this, a theoretical maximum door zone size is calculated prior to putting the installation into operation. For this, the expected reaction times of the detector, control system and actuator, as well as the maximum possible acceleration, must be known. This value is entered in the control system menu upon commissioning and verified by means of an automatic learn drive at all floors.

During the acceptance test of the installation by the designated entity, a UCM-A3 test can be activated in the test menu. It simulates, with the aid of the UCM test relay depicted in the block wiring diagram, the UCM case with closed car and shaft door.

The UCM case (exiting the door zone with the door circuit open) is detected by the control system software. The installation is shut down and issues the error message „DRM A3-UCM ERROR“. A return to normal operation can only take place after a reset of the error message in the control system menu (trained specialists are required for this).

3.3 Prerequisites for the actuator

If the power supply of the actuator takes place directly through the safety circuit, redundant control of the actuator is not necessary (230 V shutoff valve). If the actuator requires a different voltage, e.g. 400 VAC or 24 VDC, then redundant control with standstill monitoring in series with the standstill monitoring of the drive contactors is necessary (redundant 24 V lowering valves); see EN81-1/2:1998 + A3:2009 Item 9.13.3 or EN 81-20/50:2014 5.6.7.3.

If the actuator has no function in normal operation of the installation and is only responsible for stopping in a UCM case, then the function of the actuator does not need to be monitored (shutoff valve). If the actuator also has a function in normal operation, then the opening and closing of the actuator through the corresponding contacts on the actuator, by means of the control system or control software, is necessary (self-monitoring/redundant lowering valves).

3.4 Technical data and detection times

Designation		Detection time
FST-2XT safety circuit bypass control	EU-ESD 023	10 ms
FST-2XTs safety circuit bypass control	EU-ESD 024	10 ms
Protection for brake / valve	Siemens 3RTxxx	12 ms
Zone magnet switch	Schmersal BN32r	
	Normally open (NO) contact switching time	0.3 - 1.5 ms
	Restarting precision	+ / - 0.25 mm
Speed signal > 0.2 m/s	FST-2XT/XTs	102 ms
Speed signal > 0.2 m/s	Frequency inverter	15 ms

3.5 Calculation example

The graphic below shows the theoretical drive curve of the car in a UCM case.

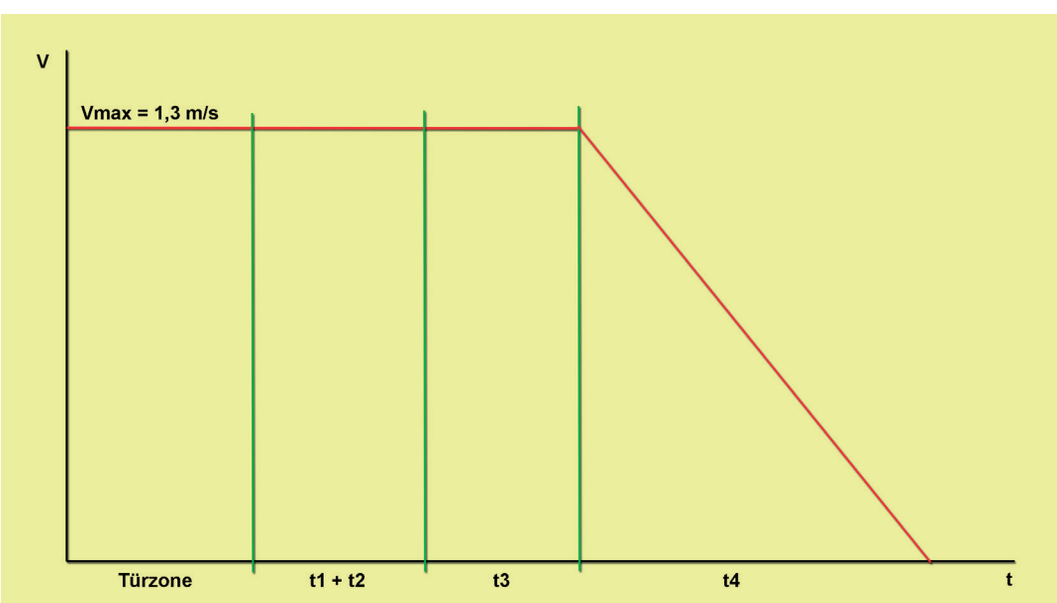

Door zone: Time until exiting the door zone (distance: 50 - 200 mm)

t1: Reaction time of the safety circuit bypass control = 10 ms

t2: Reaction time for control of the lowering valve (Siemens series 3RTxxx) = 12 ms

(t2 = 0, if UCM actuator = 230 V shutoff valve)

t3: Reaction time of lowering valves and/or shutoff valve (see hydraulics manufacturer BMP)

t4: Delay time for lowering valves and shutoff valve (see hydraulics manufacturer BMP)

Due to system limitations, the maximum speed of a hydraulic drive when leaving the door zone Vmax = 1.3 m/s cannot be exceeded.

Assuming this unfavourable situation, the following UCM distances result:

› Maximum door zone as per EN 81: SZ = 0.2 m

› Reaction distance as a result of the reaction time of the safety circuit bypass control (t1 = 10 ms): S1 = Vmax * t1 = 1.3 m/s * 0.010 s = 0.0130 m

› Reaction distance as a result of the reaction time of the control of the lowering valves (t2 = 12 ms): S2 = Vmax * t2 = 1.3 m/s * 0.012 = 0.0156 m

3.5.1 Maximum UCM distances for UCM actuator = shutoff valve

Stotal = SZ + S1 = 0.2 + 0.0130 = 0.2130 m

=> Maximum permissible reaction and braking distance of the shutoff valve at Vmax:

Stotal (actuator) = 1 m – Stotal = 1 - 0.2130 = 0.7870 m

3.5.2 Maximum UCM distances for UCM actuator = redundant lowering valves

Stotal = SZ + S1 + S2 = 0.2 + 0.0130 + 0.0156 = 0.2286 m

=> Maximum permissible reaction and braking distance of the shutoff valve at Vmax:

Stotal (actuator) = 1 m – Stotal = 1 - 0.2286 = 0.7714 m

If the reaction and braking distances specified in the hydraulics manufacturer‘s type examination test exceed each of those stated above (0.78 m for the shutoff valve and 0.77 m for redundant lowering valves), then the door zone size must be reduced by the corresponding dimension.

Important: This is a worst-case calculation; the actual stopping distance depends on the oil flow rate and the acceleration from the storey.

3.6 Commissioning

When commissioning of installation, the following procedure must be observed:

The door zone magnets must be set precisely according to the calculated values. These values must be provided by the lift manufacturer.

The maximum door zone value (200 mm) determined by the calculation method should be entered in mm in the control system menu under `MAIN MENU/Positioning/Global/UCM-A3 Zone` (range of values: 0..250 mm). The default value is 250 mm.

Now, the standard commissioning must be performed according to the Installation & Commissioning Manual of the FST control system. Note, that in this case a learn drive needs to be carried out, also if an absolute encoder is installed! The learn drive checks whether the magnet zones are actually smaller, equal to the UCM-A3 zone.

If all door zones (defined by the door zone magnets) are smaller than the specified A3 zone, the learn drive will be finished without error. If one or more door zones whose size exceeds the maximum value are detected during the learn drive, the error message „`WARNING *** One or more door zones are longer than the permissible maximum values set by *Positioning - Global- A3-ZONE`“ appears on the control system display until a renewed learn drive has been successfully finished. If this error message occurs, an inspection, and possibly a reduction of the door zones, must be performed. Then, a repeated learn drive and – if necessary, a renewed level adjustment – must be carried out.

The UCM test relay serves to keep of the safety circuit open, despite the closed door. This test relay is controlled via an FST port. The port setting must be checked (port RAW = `FF063E84`).

The configuration for the maximum bypass speed must also be checked. The parameter for `V Bypass Max` must be set to `200 mm/s`; it can be among under the hidden menus (`System/Factory Menu/Settings/V-Bypass Max: 200 mm/s`). The hidden menus can be made accessible under `MAIN MENU/System/Factory Menu/Hidden Menus/YES`.

3.7 Test description

During the UCM-A3 test, the car is put in the most unfavourable position (top floor) and the UCM-A3 test is performed in the downward direction.

During the UCM test, the control system closes the car doors. If the closed doors have been detected via safety circuit query, the control system opens the UCM test relay, interrupting the door circuit. At the same time, the control system activates the door bypass of the safety circuit bypass control through „Zone enabling“ and

Bypass enabling“ (see block wiring diagram) and sends a drive command with the nominal speed in downward direction.

The drive accelerates downward at the nominal speed. Upon leaving the door zone, the safety circuit bypass control interrupts the door bypass and the safety circuit that is now open interrupts the power supply of the actuator – resulting in an emergency stop in a UCM case.

The actual car distance that has been travelled is automatically shown in millimetres in the control system display (Pd value).

The installation is brought to a standstill with the error message „`DRM A3-UCM ERROR`“ and can only be put into operation again through the parameter `TEST MENU/UCM-A3 Fault Reset`. Also after a power failure, the control system remains at a standstill with „`DRM A3-UCM ERROR`“ (non-volatile memory); see EN81 1/2:1998 + A3:2009 Item 9.13.9 or EN 81-20/50:2014 5.6.7.3 / 5.6.7.9.

If the UCM distance actually travelled is smaller than that which is permissible, then the UCM test was successful.

Test instructions

The test is started through the menu item `TEST MENU/UCM-A3 Test Down`. In the second line of the display, the message „`UCM-A3 Test`“ appears. After the second forced stop, the control system shows the FST display the message „`DRM A3-UCM ERROR`“. Now, the actual distance travelled can be read under `PD=`.

This test can also be performed in the opposite direction (`UCM-A3 Test Up`) if necessary.

An Error Reset can take place only in `TEST MENU/UCM-A3 Fault Reset`.

3.7.1 Actuator self-monitoring test

According to EN 81-1/2:1998 + A3:2009 Item 9.11.13 / F8.3.2.4. „To test the function of the detector, 10 attempts must be performed“ or EN 81-20/50:2014 5.6.7.3/5.8.3.2.4/6.3.13 „If the protective device requires a self-monitoring (5.6.7.3), its function must be checked“, the following tests must be performed if the actuator (valve) is also to be used for normal operation (*see chapter 3.3*):

Test instructions for actuator test

› Test 1

Start the test under the test menu item „`UCM-A3 Test Act.`“.

The lift automatically carries out 10 trips and tests the response / detection of the valves. In the second line of the control system display, the scrolling text „`A3-Actuator-Test running, a total of 10 drives...`“. appears. During this trip, the car calls and landing calls are not enabled and the doors are locked. If the 10 trips are completed without an error message, the test was successful. The entry „`A3 ACTR.TEST-OK!`“ occurs in the error memory as an event. If the „`A3 ACTR.TEST-ABORT!`“. message appears, there is an error. It must be rectified and the test repeated.

› Test 2

When starting the lift, disconnect a feedback contact (FST X1.19 or X1.20); when stopping at the next floor, the lift is brought to a standstill and the „`DRM A3-DRIVE ERROR`“ error message appears in the display. No further trips are possible.

Reconnect the feedback contact and reset the error message; consequently, normal trips are possible again.

If the actuator (valves) is itself monitored by the unit, this is an element of the acceptance test of the hydraulics manufacturer.

3.7.2 Recurrent test

For the recurrent test, the UCM test is to be performed as described in Chapter 3.7.

4 Implementation for rope lift installations

With the safety circuit bypass control of the FST, both the detector and the controller of the protective device can be put into effect.

4.1 Block wiring diagram

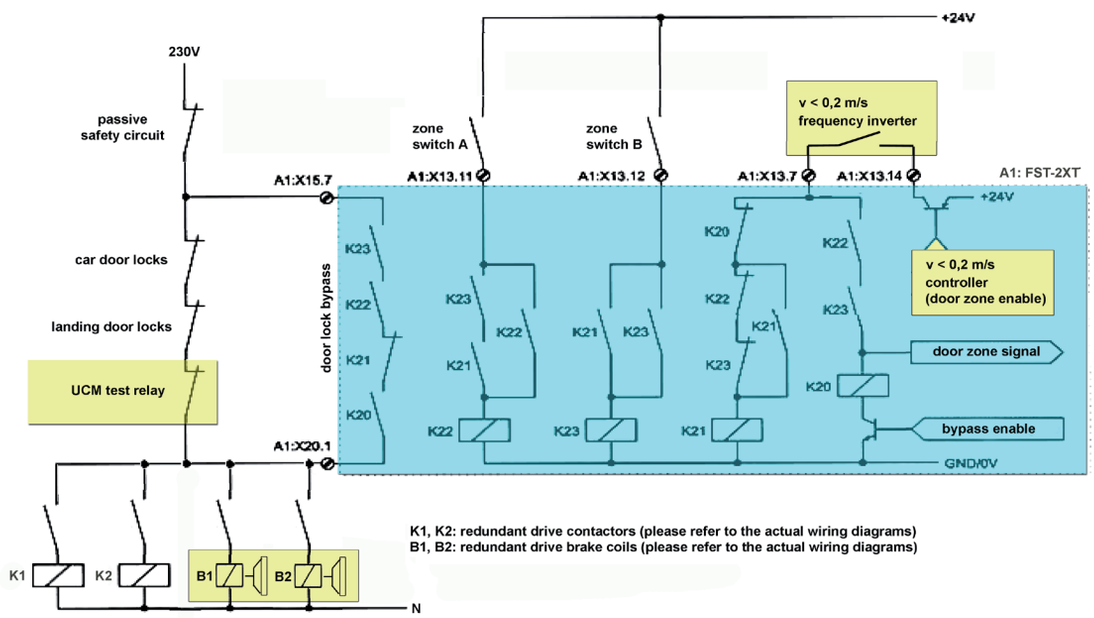

4.2 General description of the available functions

The safety circuit bypass control, depicted in the right section of the block wiring diagram, ensures the safe bypassing of the car door contacts and shaft door contacts within the door zone by means of two independent door zone switches (zone switch A and zone switch B). The safety circuit bypass control is only activated by the control system when the target floor has been reached and the measured car speed is less than 0.2 m/s (zone enabling). Conversely, it ensures safe shutdown of the downstream drive components and the UCM actuator upon exiting the door zone with the car door open and with a car speed greater than 0.2 m/s.

The control system measures the car speed via the encoder of the shaft positioning system (incremental or absolute encoder). As an additional safeguard, a speed-dependent contact of the frequency inverter is located in series to the door zone switch A. It ensures that the safety circuit bypass control is also disabled if the frequency inverter detects a car speed of more than 0.2 m/s.

Caution: Only frequency inverters with a speed output (>0.2 m/s) can be used.

The safety circuit bypass control of the FST ensures that in a UCM case, i.e. safe shutdown of the downstream drive components, if – with the doors open – the car either:

› Exits the door zone (defined by way of two magnet switches), or

› The control system detects a speed greater than 0.2 m/s, or

› The frequency inverter detects a speed greater than 0.2 m/s

In order to adhere to the permissible total stopping distance in case of UCM, the size of the door zone must be limited depending on the installation. To do this, a theoretical maximum door zone size is calculated prior to putting the installation into operation. For this, the expected reaction times of the detector, control system and actuator, as well as the maximum possible acceleration, must be known. This maximum door zone size is entered in the control system menu upon commissioning and verified by means of an automatic learn drive at all floors.

During the acceptance test of the installation by the designated entity, a UCM-A3 test can be activated in the test menu. It simulates, with the aid of the UCM test relay depicted in the block wiring diagram, the UCM case with closed car and shaft door.

The UCM case (exiting the door zone or excessive speed with the door circuit open) is detected by the control system software. The installation is shut down and issues the error message „DRM A3-UCM ERROR“. Commissioning can only take place after a reset of the error message in the control system menu (trained specialists are required for this). Also after a power failure, the control system remains at a standstill with „DRM A3-UCM ERROR“.

4.3 Prerequisites for the actuator (drive brake)

If the power supply of the actuator takes place directly through the safety circuit, redundant control of the actuator is not necessary. If the actuator requires a different voltage than the safety circuit, e.g. 400 VAC or 24 VDC, then redundant control with standstill monitoring in series with the standstill monitoring of the drive contactors is necessary; see EN81-1/2:1998 + A3:2009 Item 9.11.3.

If the actuator has no function in normal operation of the installation and is only responsible for stopping in a UCM case, then the function of the actuator does not need to be monitored (e.g. cable brake or traction sheave brake). If the actuator also has a function in normal operation, then the opening and closing of the actuator through the corresponding contacts on the actuator, by means of the control system or control software, is necessary (self-monitoring, e.g. service brake if gearless).

4.4 Technical data and detection times

Designation		Detection time
FST-2XT safety circuit bypass control	EU-ESD 023	10 ms
FST-2XTs safety circuit bypass control	EU-ESD 024	10 ms
Protection for brake / valve	Siemens 3RTxxx	12 ms
Zone magnet switch	Schmersal BN32r	
	Normally open (NO) contact switching time	0.3 - 1.5 ms
	Restarting precision	+ / - 0.25 mm
Speed signal > 0.2 m/s	FST-2XT/XTs	102 ms
Speed signal > 0.2 m/s	Frequency inverter	15 ms

4.5 Calculation of the UCM stopping distance

When calculating the UCM stopping distance, basically two cases must be considered:

Case 1: Car exits the door zone with a speed of v <= 0.2 m/s

Case 2: Car accelerates to a speed of v > 0.2 m/s

In both cases, the drive curve in case of UCM can be subdivided into 6 phases with constant acceleration:

Phase 1: Drive up to departure of the door zone (case 1) or, respectively, acceleration up to v > 0.2 m/s (case 2)

Phase 2: Acceleration during the reaction time of the control system

Phase 3: Acceleration during the braking delay time

Phase 4: Acceleration during build-up of the braking momentum

Phase 5: Delay during build-up of the braking momentum

Phase 6: Delay up to standstill

Drive curve – case 1:

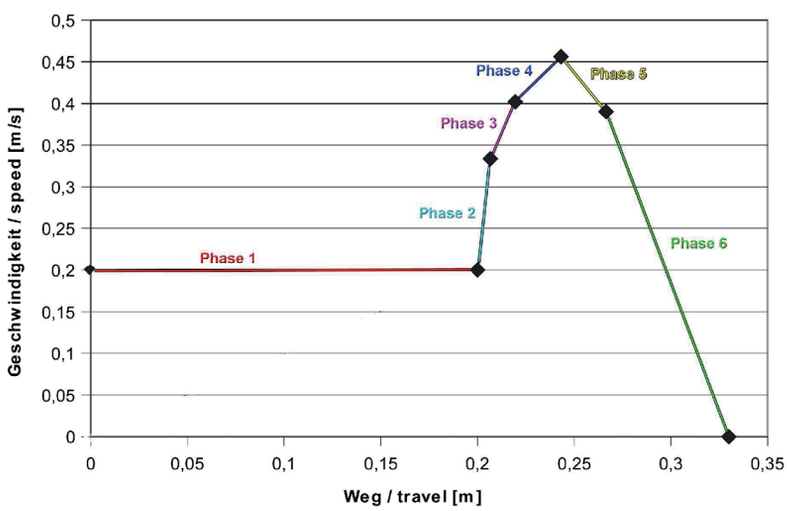

Drive curve – case 2:

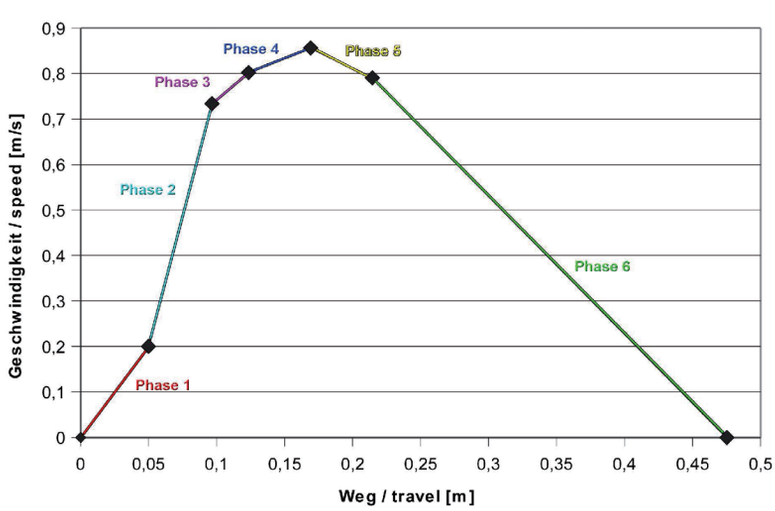

In order to calculate the theoretical UCM stopping distances in both cases, the following values must be specified by the drive manufacturer:

› a1, a2: Maximum expected acceleration in Phase 1 and Phase 2
› a3: Mean acceleration in Phase 3
› t3: Braking delay time in Phase 3
› a4: Mean acceleration in Phase 4
› a5: Mean delay in Phase 5
› t4, t5: Brake application time in Phase 4 and Phase 5
› a6: Delay in Phase 6, taking into account the traction

Additionally, the following control system reaction times are a part of the calculation:

› ts2z: Reaction time of the control system upon exiting the door zone
› ts2v: Reaction time of the control system at a speed of v > 0.2 m/s
› ts2b: Triggering delay of the circuit for shutting down the UCM actuator

Calculation example:

The following calculation example is based on an installation with the data stated below:

› Payload Q = 1000 kg
› Car weight F = 1000 kg
› Counterweight balance = 50%
› Suspension bracket 2:1
› Ziehl-Abegg drive SM200.30B up on top
› Speed v = 1.0 m/s

Ziehl-Abegg specifies the following data for this installation:

› a1, a2: 5.34 m/s^2
› a3: 1.96 m/s^2
› t3: 35 ms
› a4: 0.98 m/s^2
› a5: 1.2 m/s^2
› t4, t5: 55 ms
› a6: 1.2 m/s^2

This results in the following UCM stopping distances for case 1 and case 2:

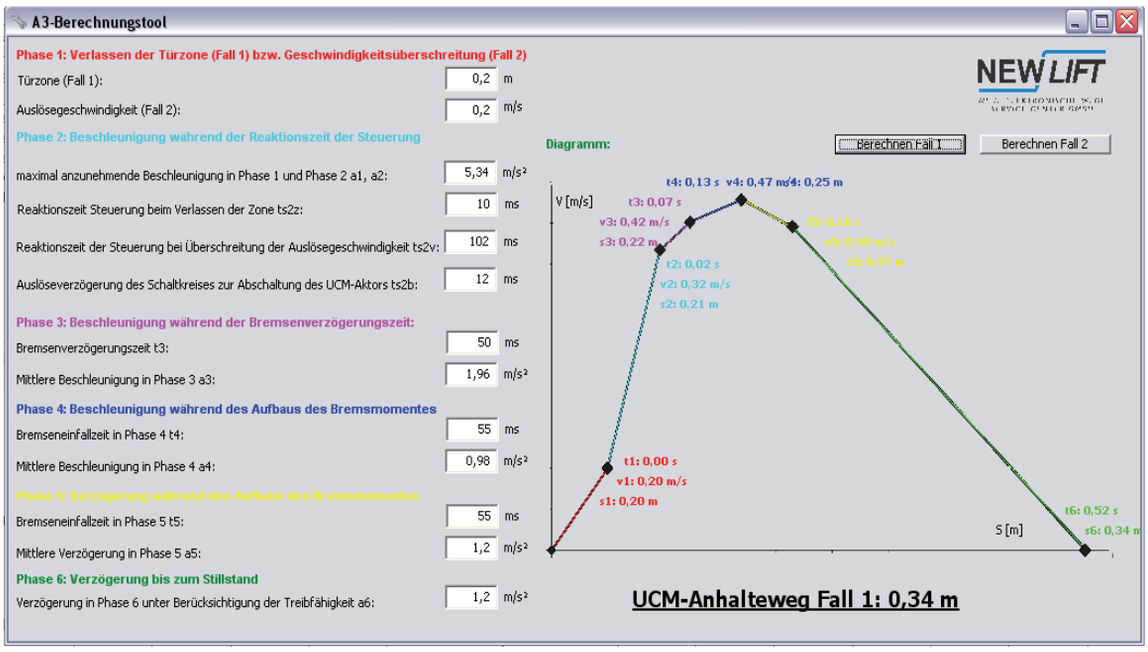

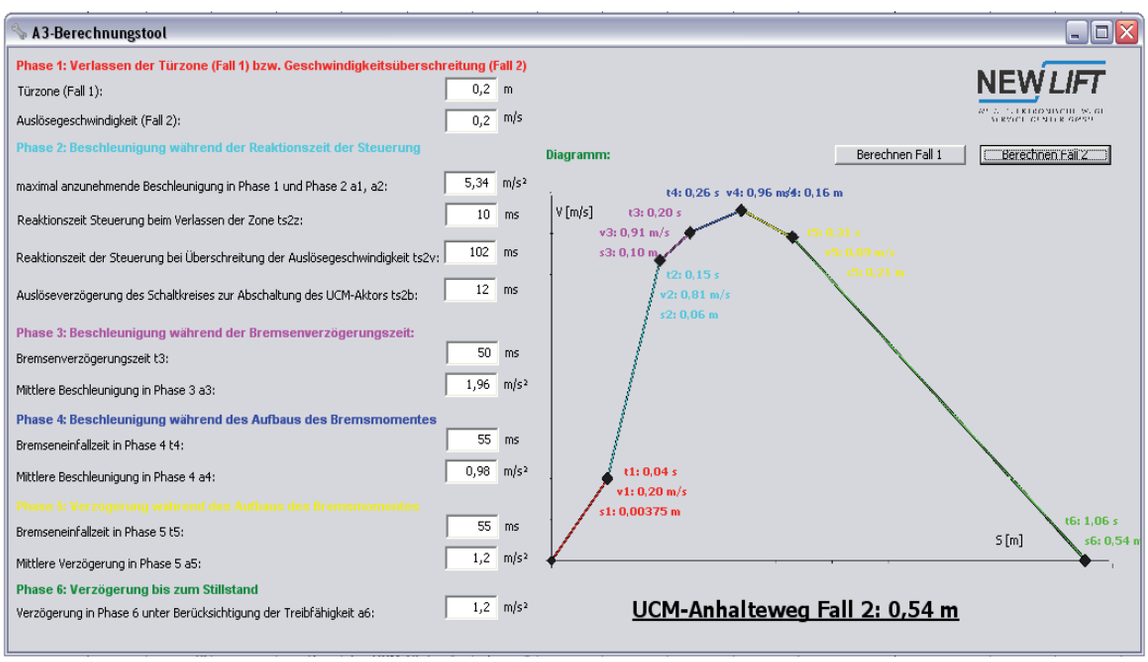

All well-known drive manufacturers offer computation programs that make possible a theoretical calculation of the UCM stopping distance on the basis of the system data.

This computation is an integral part of the delivery scope of the drive manufacturer, if the drive brake is used as an UCM actuator with type examination test.

4.6 Commissioning

When commissioning of installation, the following procedure must be observed:

The door zone magnets must be set precisely according to the calculated values. These values must be provided by the lift manufacturer.

The maximum door zone value (200 mm) determined by the calculation method should be entered in mm in the control system menu under `MAIN MENU/Positioning/Global/UCM-A3 Zone` (range of values: 0..250 mm). The default value is 250 mm.

Now, the standard commissioning must be performed according to the Installation & Commissioning Manual of the FST control system. Note, that in this case a learn drive needs to be carried out, also if an absolute encoder is installed! The learn drive checks whether the magnet zones are actually smaller, equal to the UCM-A3 zone.

If all door zones (defined by both door zone magnets) are smaller than the specified A3 zone, the learn drive will be finished without error. If one or more door zones whose size exceeds the maximum value are detected during the learn drive, the error message „`WARNING *** One or more door zones are longer than the permissible maximum values set by *Positioning/Global - A3-ZONE`“ appears on the control system display until a renewed learn drive has been successfully finished. If this error message occurs, an inspection, and possibly a reduction of the door zones, must be performed. Then, a repeated learn drive and – if necessary, a renewed level adjustment – must be carried out.

The UCM test relay serves to keep of the safety circuit open, despite the closed door. This test relay is controlled via an FST port. The port setting must be checked (port RAW = `FF063E84`).

The configuration for the maximum bypass speed must also be checked. The parameter for `V Bypass Max` must be set to `200 mm/s`; it can be among under the hidden menus (`System/Factory Menu/Settings/V-Bypass Max: 200 mm/s`). The hidden menus can be made accessible under `MAIN MENU/System/Factory Menu/Hidden Menus/YES`.

4.7 Test description

The UCM-A3 test must be performed in the most unfavourable load case. With installations having more than 50% counterweight balance, the most unfavourable case is if the empty car in the next to top floor travels upward! During the UCM-A3 test, the car is put in the most unfavourable position (next to top floor) and the UCM-A3 test is performed in the upward direction.

During the UCM test, the control system closes the car doors. If the closed doors have been detected via safety circuit query, the control system opens the UCM test relay, interrupting the door circuit. At the same time, the control system activates the door bypass of the safety circuit bypass control through „Zone enabling“ and „Bypass enabling“ (see block wiring diagram) and sends a drive command with the nominal speed in upward direction.

The drive accelerates upward with maximum acceleration. Upon exiting the door zone (case 1) or if the max. permissible re-levelling speed is exceeded (case 2), the safety circuit bypass control interrupts the door bypass and the – now open – safety circuit interrupts the power supply to the drive brake!

In case of UCM, there is an emergency stop!

The actual car distance that has been travelled is automatically shown in millimetres in the control system display (Pd value).

The installation is brought to a standstill with the error message „`DRM A3-UCM ERROR`“ and can only be put into operation again through the parameter „`DRM-UCM-A3 RESET`“. Also after a power failure, the control system remains at a standstill with „`DRM A3-UCM ERROR`“ (non-volatile memory).

If the UCM distance actually travelled is smaller than that which is permissible, then the UCM test was successful.

Test instructions for UCM-A3 test

The test is started through the menu item `TEST MENU/UCM-A3 Test Up`. In the second line of the display, the message „`UCM-A3 TEST`“ appears. After the second forced stop, the control system shows the FST display the message „`FST-UCM-A3 ERROR`“. Now, the actual distance travelled can be read.

This test can also be performed in the opposite direction (`UCM-A3 Test Down`) if necessary.

4.7.1 Actuator self-monitoring test

According to EN 81-1/2:1998 + A3:2009 Item 9.11.13 / F8.3.2.4. „To test the function of the detector, 10 attempts must be performed“ or EN 81-20/50:2014 5.6.7.3/5.8.3.2.4/6.3.13 „If the protective device requires a self-monitoring (5.6.7.3), its function must be checked“, the following tests must be performed if the actuator (valve) is also to be used for normal operation (*see chapter „3.3 Prerequisites for the actuator“ on page 10*):

Test instructions for actuator test

› Test 1

Start the test under the test menu item „`UCM-A3 Test Act.`“.

The lift automatically carries out 10 trips and tests the response / detection of the brake contacts. In the second line of the control system display, the scrolling text „`A3-Actuator-Test running, a total of 10 drives...`“ appears. During this trip, the car calls and landing calls are not enabled and the doors are locked. If the 10 trips are completed without an error message, the test was successful. The entry „`A3 ACTR.TEST-OK!`“ occurs in the error memory as an event. If the „`A3 ACTR. TEST-ABORT!`“ message appears, there is an error. It must be rectified and the test repeated.

› Test 2

When starting the lift, disconnect a feedback contact (FST X1.19 or X1.20); when stopping at the next floor, the lift is brought to a standstill and the „`DRM A3-DRIVER ERROR`“ error message appears in the display. No further trips are possible.

Reconnect the feedback contact and reset the error message; consequently, normal trips are possible again.

If the actuator (brake contacts) is connected to the frequency inverter and monitored, this is an element of the acceptance test of the frequency inverter manufacturer.

4.7.2 Recurrent test

For the recurrent test, the UCM test is to be performed as described in Chapter 4.7.

5 Maintenance

The system is maintenance-free.

Lifespan of the contactors and valves / brakes; see the data sheet of the respective manufacturer.

6 Appendix

Here you will find a sample diagram for connecting the appropriate self-monitoring system and the type examination certifications for the individual control system types FST-2XT/XTs.

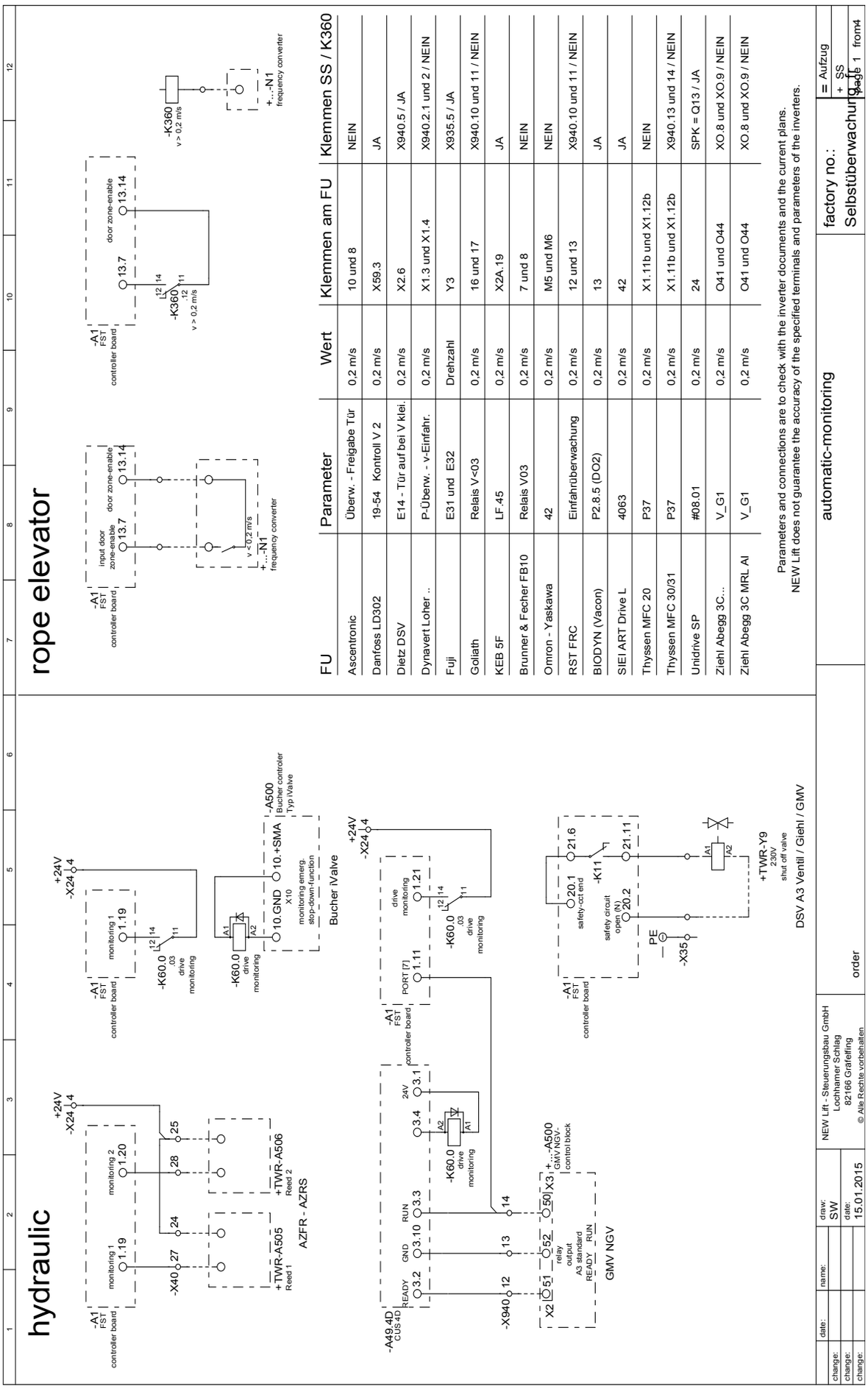

FU	Parameter	Wert	Klemmen am FU	Klemmen SS / K360
Ascentronic	Überw. - Freigabe Tür	0,2 m/s	10 und 8	NEIN
Danfoss LD302	19-54 Kontroll V 2	0,2 m/s	X59.3	JA
Dietz DSV	E14 - Tür auf bei V klei.	0,2 m/s	X2.6	X940.5 / JA
Dynavert Loher ..	P-Überw. - v-Einfahr.	0,2 m/s	X1.3 und X1.4	X940.2.1 und 2 / NEIN
Fuji	E31 und E32	Drehzahl	Y3	X935.5 / JA
Goliath	Relais V<03	0,2 m/s	16 und 17	X940.10 und 11 / NEIN
KEB 5F	LF.45	0,2 m/s	X2A.19	JA
Brunner & Fecher FB10	Relais V03	0,2 m/s	7 und 8	NEIN
Omron - Yaskawa	42	0,2 m/s	M5 und M6	NEIN
RST FRC	Einfahrüberwachung	0,2 m/s	12 und 13	X940.10 und 11 / NEIN
BIODYN (Vacon)	P2.8.5 (DO2)	0,2 m/s	13	JA
SIEI ART Drive L	4063	0,2 m/s	42	JA
Thyssen MFC 20	P37	0,2 m/s	X1.11b und X1.12b	NEIN
Thyssen MFC 30/31	P37	0,2 m/s	X1.11b und X1.12b	X940.13 und 14 / NEIN
Unidrive SP	#08.01	0,2 m/s	24	SPK = Q13 / JA
Ziehl Abegg 3C...	V_G1	0,2 m/s	O41 und O44	XO.8 und XO.9 / NEIN
Ziehl Abegg 3C MRL AI	V_G1	0,2 m/s	O41 und O44	XO.8 und XO.9 / NEIN

Parameters and connections are to check with the inverter documents and the current plans.
NEW Lift does not guarantee the accuracy of the specified terminals and parameters of the inverters.

ZERTIFIKAT ◆ CERTIFICATE ◆ 認証証書 ◆ СЕРТИФИКАТ ◆ CERTIFICADO ◆ CERTIFICAT

Industrie Service

EU-TYPE EXAMINATION CERTIFICATE

According to Annex IV, Part A of Directive 2014/33/EU

Certificate No.:	EU-ESD 023
Certification Body of the Notified Body:	TÜV SÜD Industrie Service GmbH Westendstr. 199 80686 München - Germany Identification number 0036
Certificate holder:	NEW *LIFT* GmbH Lochhamer Schlag 8 82166 Gräfelfing - Germany
Manufacturer of the Test Sample:	NEW *LIFT* GmbH Lochhamer Schlag 8 82166 Gräfelfing - Germany
Product:	Printed circuit boards "FST-2XT" and "FSM-2" with electronic components, taps in the safety circuit and safety circuit bypass control as well as subsystem against unintended car movement
Type:	FST 5 00 (FST-2XT) and FSM 5 20 (FSM-2)
Directive:	2014/33/EU
Test basis:	- Directive 2014/33/EU dated 2014-02-26 Annex I - EN 81-1/2:1998+A3:2009 (D) - EN 81-20:2014 (D) - EN 81-50:2014 (D)
Test report:	EU-ESD 023 dated 2016-10-04
Outcome:	The safety component conforms to the essential health and safety requirements of the mentioned Directive as long as the requirements of the annex of this certificate are kept.
Date of issue:	2016-10-04
Date of translation:	2017-03-28

TÜV SÜD Industrie Service GmbH 00 36 Notified Body

Achim Janocha
Certification Body "lifts and cranes"

TÜV®

Enclosure to the EU-Type Examination Certificate
No. EU-ESD 023 of 2016-10-04

TÜV SÜD
Industrie Service

Authorised Manufacturer of Serial Production – Production Sites (valid from: 2016-10-04):

Company: NEW *LIFT* GmbH

Address: Lochhammer Schlag 8
D-82166 Gräfelfing
Germany

- END OF DOCUMENT -

Based on: Document from NEW LIFT of 2016-08-30

Annex to the EU Type Examination Certificate
No. EU-ESD 023 of 2016-10-04

Industrie Service

1 Scope of application

The test items are the FST 5 00 (FST-2XT) printed circuit board as "lift control system" and FSM 5 20 (FSM-2) printed circuit board as "car top control module" with electronic components, taps in the safety circuit and safety circuit bypass control (FST 5 00) as well as subsystem as element for detecting unintended car movement. Also tested are the clearance and creepage distances of the FST 5 00 and the FSM 5 20 as well as the safety circuit scan control of the FST 5 00.

1.1 Function of the safety circuit

The safety circuit bypass control consists of the K21, K22 and K23 safety relays.
The SHS_ZOFR (+24V) zone release signal must be activated by the controller. A zone release is active if necessary, i.e., if the controller is to open the car door on the corresponding floor.
First, K21 must be energized; for this purpose, K20, K22 and K23 must be de-energized. K21 holds itself as long as K20 is not energized and there is a zone release.
K23 can only be energized after K21 if zone switch B closes. K23 holds itself as long as zone switch B is closed.
K22 can be energized after K23 and K21 if zone switch A closes. K22 holds itself as long as zone switch A is closed.
If K23 and K22 are energized, K20 can also be energized as soon as the controller starts the bypass release (0V). This, however, only occurs as needed and if the car speed is <0.3m/s. Not until K20 energizes does K21 de-energize. The door bypass is now active and remains so until the bypass release is cancelled and K20 is de-energized again.
K22 and K23 are not de-energized until switches A and B are opened again due to a drive outside of the door zone. – Only if both relays are de-energized can another cycle begin by energizing K21 as soon as the controller switches a renewed zone release. Transistor T2 is used for resetting relay K22 after a power failure.
In the event of failure of the operating voltage, zone switch A continues to be supplied via auxiliary power supply HSG, allowing the door zone to be detected should freeing be necessary. At the same time, T2 switches K22 and K23 off so that when the operating voltage is restored, the switching sequences can be completed as described.

Annex to the EU Type Examination Certificate
No. EU-ESD 023 of 2016-10-04

Industrie Service

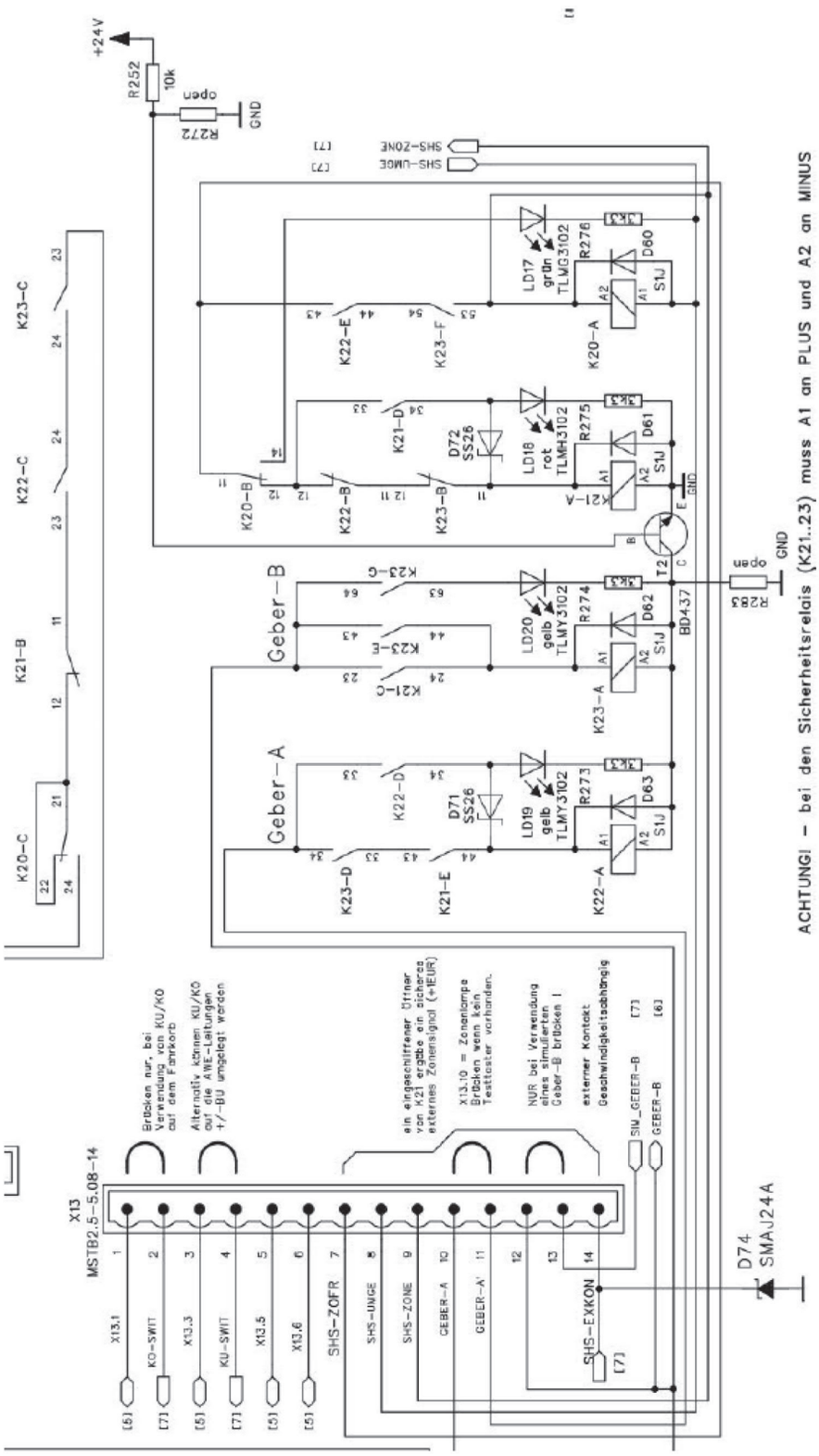

Figure 1: Portion of the wiring diagram for the control system of the door zone bypass

Annex to the EU Type Examination Certificate
No. EU-ESD 023 of 2016-10-04

Industrie Service

Depicted on the following page is the wiring diagram of the safety circuit scan control and safety circuit bypass control (figure 2).

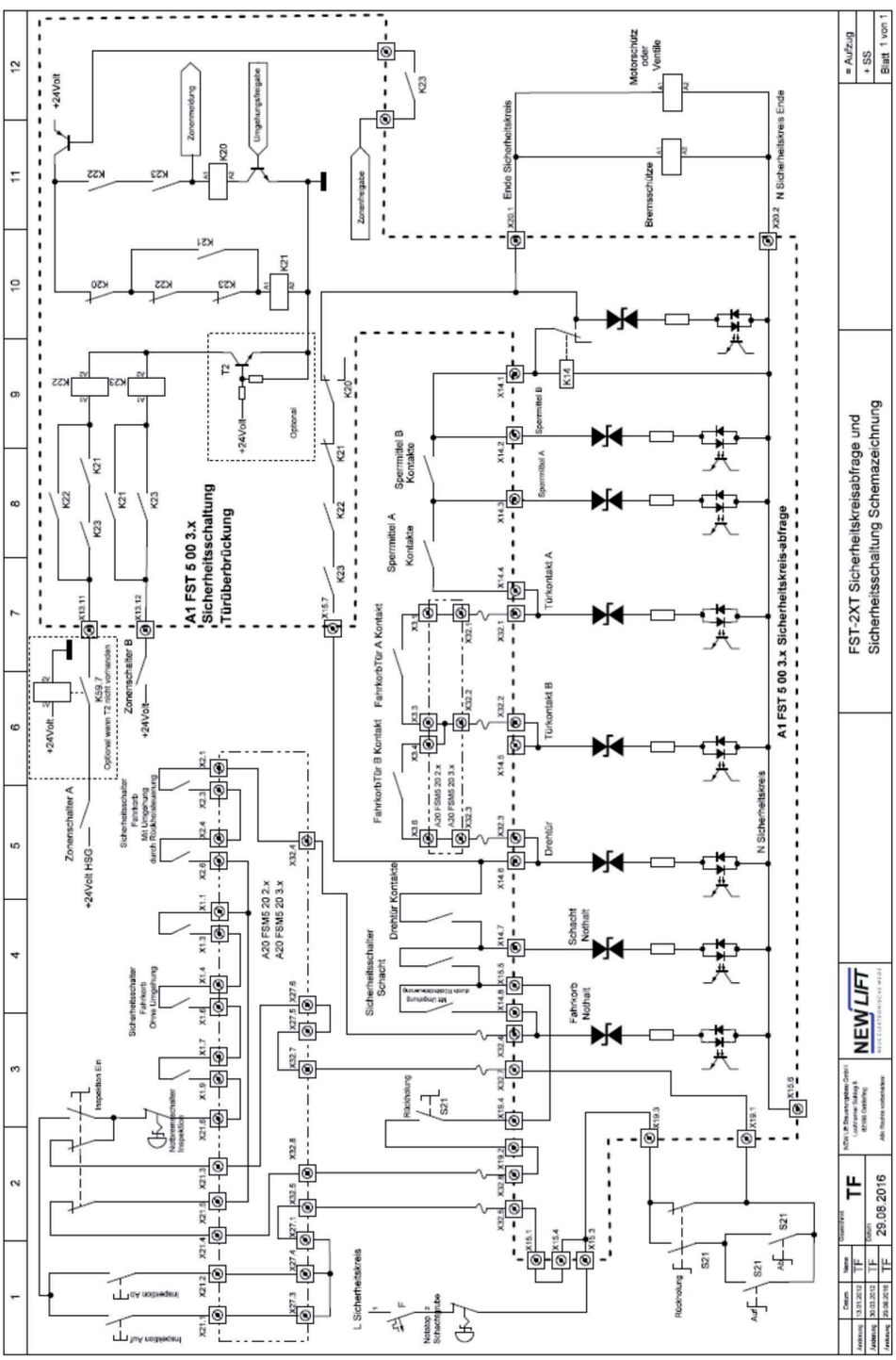

Figure 2: Wiring diagram of the safety circuit scan control and safety circuit bypass control Type FST-2XT

.

Annex to the EU Type Examination Certificate
No. EU-ESD 023 of 2016-10-04

Industrie Service

1.2 Description of the function against unintended car movement

For the device as a detecting and, if necessary, triggering element: if combined with a braking element tested in accordance with A3, e.g., in the form

a) of a drive brake for electrically operated rope lifts,

b) of a safety valve or similar for hydraulically driven lifts, this can represent the detecting as well as the triggering element of the entire protective device against the unintended movement of the car. If, on the other hand, the device is combined with a braking element tested in accordance with A3, e.g., in the form

c) of a double-acting safety gear/braking device triggered by a speed limiter tested in accordance with A3 as a triggering element – for both electrically operated rope lifts as well as with hydraulically driven lifts – this can only represent the detecting element of the entire protective device against the unintended movement of the car.

1.2.1 Electrically operated passenger and freight lifts

The safety circuit bypass control is only activated by the control system if firstly the target floor has been reached and secondly the measured car speed is ≤ 0.2 m/s.

The safety circuit bypass control, when triggered, i.e.,

– if the door zone (defined by two magnet switches) is exited as well as

– before the door zone is exited with a speed of ≥ 0.2 m/s with unlocked landing door and/or open car door,

ensures a safe shutdown of the downstream drive components and, subsequently,

– either the triggering of the braking element according to cases (a.) and (b.) in the comment of the previous section

– or the activation of the triggering element of the protective device against the unintended car movement in cases of the combination specified in (c). of the previous section.

The car speed is detected by the control system via the encoder of the shaft positioning system. For additional safety (redundancy), a speed-dependent contact of the frequency inverter is integrated at the terminals of the control system – A1:X13.7 and A1:X13.14. It is thereby ensured that the safety circuit bypass control is also inactive (safety circuit open) if the frequency inverter detects a car speed of more than 0.2 m/s.

1.2.2 Hydraulically operated passenger and freight lifts

In principle, the function is identical to that of electrically operated passenger and freight lifts (electrically operated rope lifts), but without monitoring of the car speed.

Annex to the EU Type Examination Certificate
No. EU-ESD 023 of 2016-10-04

Industrie Service

1.2.3 Electrically as well as hydraulically operated passenger and freight lifts

In order to adhere to the permissible total stopping distance in the case of an unintended car movement, the length of the door zone must be limited depending on the installation and its maximum length calculated during the course of planning the lift system.

For the device in question, the reaction times of the detecting element (sensors and their control system) as well as the reaction times and reaction distances of the triggering element and those of the braking element(s) in addition to the maximum possible acceleration by the drive in the event of an error (if applicable) and the mass ratios and other factors that influence the movement of the lift system (compensation tools, rope lengths depending on the type of rope arrangement and drive arrangement,...) are known for this purpose.

The calculated, maximum door zone size must be entered in the menu of the control system during commissioning. During the automatic learn drive, the actually specified door zone lengths are automatically checked for correctness at all floors by the control system.

During tests of the lift system in the course of the conformity assessment procedure, tests "UCM-A3 test upward" and "UCM-A3 test downward" are to be performed in the test menu of the FST controller.

This ensures that the UCM case is performed with the assistance of the UCM test relay under safe conditions, i.e., with closed car door and locked landing door.

Both UCM cases, the "exiting of the door zone" as well as "excessive speed" (only for electrically operated lifts with rope drive) with open car door(s) and/or unlocked landing door(s), are detected by the control system. The lift system is brought to a standstill with the "LSU-UCM-A3 Error" error message and can only be put back into operation by resetting the error message in the control system menu by a competent person.

In the case of a power failure, the "LSU-UCM-A3 Error" is stored and prevents the installation from being operated upon restoration of power.

Designation		Detection time
FST-2XT safety circuit bypass control	Electr./mech. switching	10 ms
Contactor for brake / valves	Siemens 3RTxxx	12 ms
Zone magnet switch	Schmersal BN32r	
	Normally open (NO) contact switching time	0.3 - 1.5 ms
	Restarting precision	+ / - 0.25 mm
Speed signal > 0.2 ms	FST-2XT	102 ms
Speed signal > 0.2 ms	Frequency inverter	15 ms

Annex to the EU Type Examination Certificate
No. EU-ESD 023 of 2016-10-04

Industrie Service

It is not mandatory that the specified types of "contactors for brake/valves" as well as "zone magnet switches" be used. The type can be selected based on the reaction and detection times of the "contactors for brake/valves" as well as the "zone magnet switches". If types other than those specified above are used, verification of the reaction and detection times is to be provided.

Shown on the following pages are the wiring diagram for rope-operated passenger and freight lifts (figure 3), the wiring diagram for hydraulically operated lift systems with shutoff valve as braking element (figure 4) as well as the wiring diagram for hydraulically operated lift systems with redundant lowering valves as braking elements (figure 5).

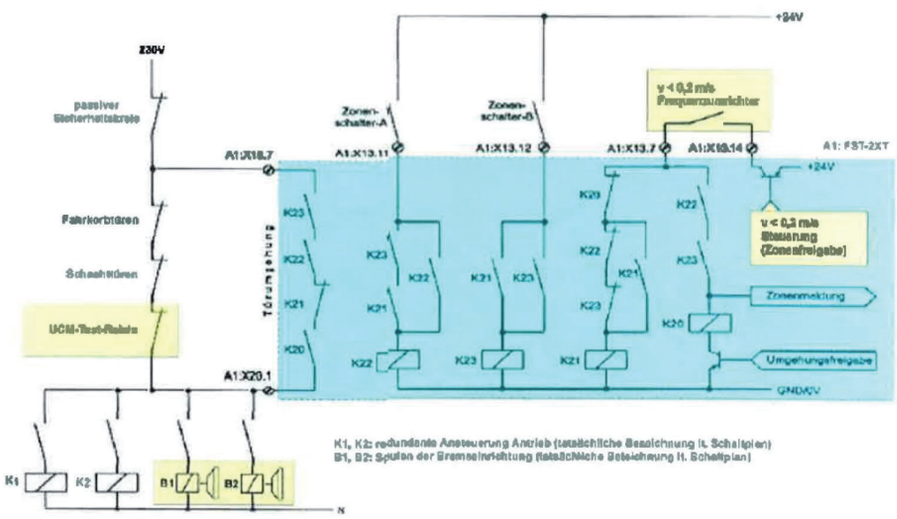

Figure 3: Wiring diagram for rope-operated passenger and freight lifts

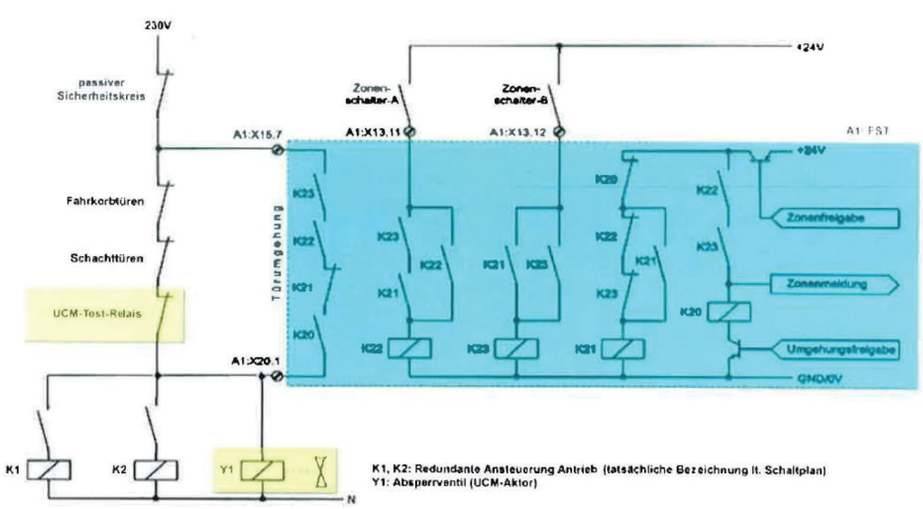

Figure 4: Wiring diagram for hydraulically operated lift systems with shutoff valve as braking element

Annex to the EU Type Examination Certificate
No. EU-ESD 023 of 2016-10-04

Industrie Service

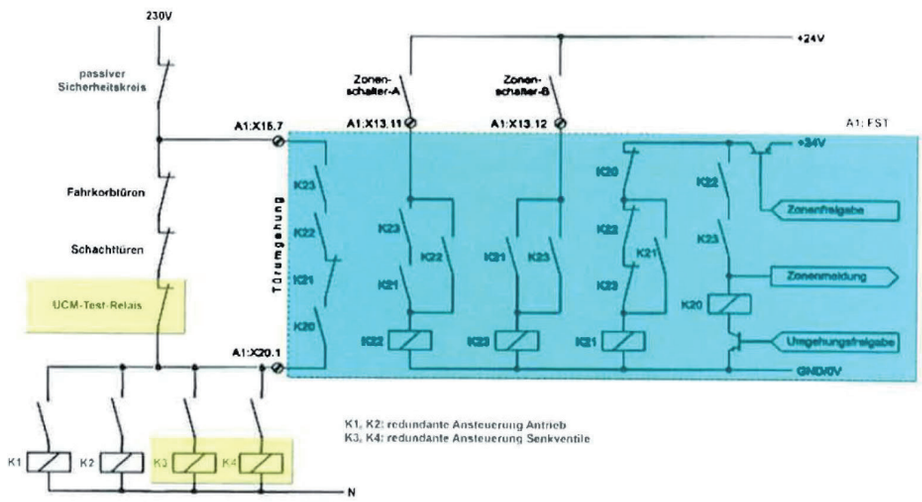

Figure 5: Wiring diagram for hydraulically operated lift systems with redundant lowering valves as braking elements

2 Conditions

2.1 The safety devices of the circuit board (tap for safety chain) are to be connected as specified in document BMP-Hinweise_FST-2XT.

2.2 The safety circuit bypass control is integrated on the printed circuit board as a fixed component of the FST-2XT 5 00 controller. It is designed for a temperature range from 0 to +65°C at a relative humidity of 15 to 85%.

2.3 The operating voltage is 24V DC, whereas the operating contacts and conductor paths are designed for a 230V AC (optional 48V DC, 110V AC) safety circuit, fuse-protected with max. 4A.

2.4 A closing contact from X20.1 to X14.1 is integrated in the controller for quick-start. Direct connection from X14.1 to X15.7 is not allowed.

2.5 The wiring must be implemented according to "FST-2XT safety circuit scan control and safety circuit bypass control schematic drawing" figure 2 (e.g., N-wire at X15.6, return wire of the contactors and valves at X20.2; X14.1 not connected to X15.7).

2.6 If the braking element is supplied with power directly via the electric safety circuit, redundant activation of the braking element is not necessary. If the braking element requires a voltage other than that available directly from the electric safety circuit, redundant activation with standstill monitoring is necessary.

Annex to the EU Type Examination Certificate
No. EU-ESD 023 of 2016-10-04

Industrie Service

2.7 If the braking element is not involved in the checking of the speed or deceleration in normal operation or does not stop the car in normal operation but is rather only responsible for braking in the UCM case, it is not necessary to monitor the proper function of the braking element.
Otherwise, the proper opening or closing of the braking element via the contacts required for this purpose is necessary via the control software.

2.8 Use only in combination with:
- Control systems manufactured by NEW *LIFT*, model FST-2XT

2.9 For electrically operated rope lifts, a signal must be made available to the control system in the event of speeds in excess of 0.2 m/s.

2.10 The subcomponents described in this certification must be supplemented with another subcomponent for the realisation of the "UCM-A3 function".
For this purpose, assembly operation must adhere to the requirements before performing the conformity assessment procedure.

2.11 For hydraulically operated lift systems, items 3.6, 3.7, 3.7.1, 3.7.2 and 5 of the UCM-A3 manual are to be adhered to during commissioning or recurring inspections and maintenance.

2.12 For electrically operated rope lift systems, items 4.6, 4.7, 4.7.1, 4.7.2 and 5 of the UCM-A3 manual are to be adhered to during commissioning or recurring inspections and maintenance.

2.13 The "UCM-A3" manual is to be included with the product.

2.14 The EU type examination certificate may only be used together with the corresponding appendix and attachment (manufacturer list for serial production). This attachment is updated according to information from the manufacturer / representative and published with the updated information.

3 Notes

3.1 This EU type examination certificate was prepared on the basis of the following harmonised standards:

- EN 81-1:1998 + A3:2009 (D), Appendix F.8
- EN 81-2:1998 + A3:2009 (D), Appendix F.8
- EN 81-20:2014 (D), Item 5.11.2.3
- EN 81-50:2014 (D), Item 5.6

In the event of changes or additions to the aforementioned standards or in the event of further developments to the state of the art, the EU type examination certificate must be revised.

3.2 The test results refer only to the "FST-2XT" and "FSM-2" printed circuit boards with electronic components with taps in the safety circuit and safety circuit bypass control as well as subsystem against unintended car movement and the associated EU type examination.

Annex to the EU Type Examination Certificate
No. EU-ESD 023 of 2016-10-04

Industrie Service

3.3 At the "detection device for unintended car movement (UCM) – door zone" a sign must be present (e.g., near the control system) with details on the identification of the component with the name of the manufacturer, EU type examination designation and type plate.

3.4 In the event of changes or deviations from the version documented here, an examination and, if necessary, adaptation of the alternative measures is required by the notified body.

3.5 This certificate is based on the state of the art, which is documented by the currently valid harmonised standards. If the event of changes or additions to these standards or in the event of further advances in the state of the art, a revision may become necessary.

NEW LIFT
NEUE ELEKTRONISCHE WEGE

EU Declaration of Conformity

According to the EU-directive

Product description:

Printed circuit boards FST-2XT (FST 5 00) and FSM-2 (FSM 5 20) with electronic components, pick-off connections in the safety circuit and safety bypass control as well as partial system against unintended car movement for passenger and goods lifts.

Device types: „FST-2XT“ and „FSM-2“ in all delivered versions

The EU-type examination (Certificate-no.: EU-ESD 023) was conducted by the TÜV SÜD Industry Services GmbH, ID-Nr.: CE0036.

Manufacturing control according to QM-System ISO 9001:2015 and ARL 2014/33/EU Annex VI is carried out by the Association for Technical Inspection (TÜV Rheinland Industrie Service GmbH, ID-No.: CE0035).

The named control boards were developed, constructed and produced in accordance with the Council Directives on the approximation of the laws of the Member States.

- Low Voltage Directive 2014/35/EU
- EMC-Directive 2014/30/EU
- Lift Directive 2014/33/EU

The following standarts have been considered for the evaluation of the control board:

- EN81-20 /50:2014
- EN12015:2014
- EN12016:2013
- [EN 81-1/2: 1998 + A3:2009]

There exists a complete technical documentation. The manual for the devices is available. The safety instructions of the delivered manual must be observed! This declaration confirms the conformity of the mentioned standards and directives. It does not, however, include a guarantee of characteristics.

Graefelfing, 04.04.2019

Legally binding signature:

Peter Zeitler, Managing Director

NEW *LIFT* - Neue elektronische Wege Steuerungsbau GmbH
Lochhamer Schlag 8 - 82166 Graefelfing - Germany

ZERTIFIKAT ◆ CERTIFICATE ◆ 認証証書 ◆ СЕРТИФИКАТ ◆ CERTIFICADO ◆ CERTIFICAT

TÜV SÜD
Industrie Service

EU-Design Examination Certificate

According to Annex IV, Part A of Directive 2014/33/EU

Certificate No.:	EU-ESD 024
Certification body of the notified body:	TÜV SÜD Industrie Service GmbH Westendstr. 199 80686 München - Germany Identification number 0036
Certificate holder:	NEW *LIFT* GmbH Lochhamer Schlag 8 82166 Gräfelfing - Germany
Manufacturer of the test sample: (manufacturers for series production – see attachment)	NEW *LIFT* GmbH Lochhamer Schlag 8 82166 Gräfelfing - Germany
Produkt:	Printed circuit boards " FST-2XTs" and "FSM-2" with electronic components, taps in the safety circuit and safety circuit bypass control as well as subsystem against unintended car movement
Type:	FST 51 00 (FST-2XTs) and FSM 5 20 (FSM-2)
Directive:	2014/33/EU
Test basis:	- Directive 2014/33/EU dated 2014-02-26, Annex I - EN 81-1/2:1998+A3:2009 (D) - EN 81-20:2014 (D) - EN 81-50:2014 (D)
Test report:	EU-ESD 024 dated 2016-10-04
Result:	The safety component conforms the essential health and safety requirements of the mentioned Directive as long as the requirements of the annex of this certificate are kept.
Date of issue:	2016-10-04
Date of Translation:	2017-03-28

Achim Janocha
Certification Body "lifts and cranes"

TÜV SÜD Industrie Service GmbH
00
36
Notified Body

TÜV®

Enclosure to the EU-Type Examination Certificate
No. EU-ESD 024 of 2016-10-04

Industrie Service

Authorised Manufacturer of Serial Production – Production Sites (valid from: 2016-09-28):

Company: NEW *LIFT* GmbH

Address: Lochhammer Schlag 8
82166 Gräfelfing
Germany

- END OF DOCUMENT -

Based on: Document from NEW LIFT of 2016-08-30

Page 1 of 1

Annex of the EU Type Examination Certificate
No. EU-ESD 024 of 2016-10-04

Industrie Service

1 Scope of application

The test items are the FST 51 00 (FST-2XTs) printed circuit board as "lift control system" and FSM 5 20 (FSM-2) printed circuit board as "car top control module" with electronic components, taps in the safety circuit and safety circuit bypass control (FST 51 00) as well as subsystem as element for detecting unintended car movement. Also tested are the clearance and creepage distances of the FST 51 00 and the FSM 5 20 as well as the safety circuit scan control of the FST 51 00.

1.1 Function of the safety circuit

The safety circuit bypass control consists of the K21, K22 and K23 safety relays.
The SHS_ZOFR (+24V) zone release signal must be activated by the controller. A zone release is active if necessary, i.e., if the controller is to open the car door on the corresponding floor.
First, K21 must be energized; for this purpose K20, K22 and K23 must be de-energized. K21 holds itself as long as K20 is not energized and there is a zone release.
K23 can only be energized after K21 if zone switch B closes. K23 holds itself as long as zone switch B is closed.
K22 can be energized after K23 and K21 if zone switch A closes. K22 holds itself as long as zone switch A is closed.
If K23 and K22 are energized, K20 can also be energized as soon as the controller starts the bypass release (0V). This, however, only occurs as needed and if the car speed is <0.3m/s. Not until K20 energizes does K21 de-energize. The door bypass is now active and remains so until the bypass release is cancelled and K20 is de-energized again.
K22 and K23 are not de-energized until switches A and B are opened again due to a drive outside of the door zone. – Only if both relays are de-energized can another cycle begin by energizing K21 as soon as the controller switches a renewed zone release. Transistor T2 is used for resetting relay K22 after a power failure.
In the event of failure of the operating voltage, zone switch A continues to be supplied via auxiliary power supply HSG, allowing the door zone to be detected should freeing be necessary. At the same time, T2 switches K22 and K23 off so that when the operating voltage is restored, the switching sequences can be completed as described.

Annex of the EU Type Examination Certificate
No. EU-ESD 024 of 2016-10-04

TÜV SÜD
Industrie Service

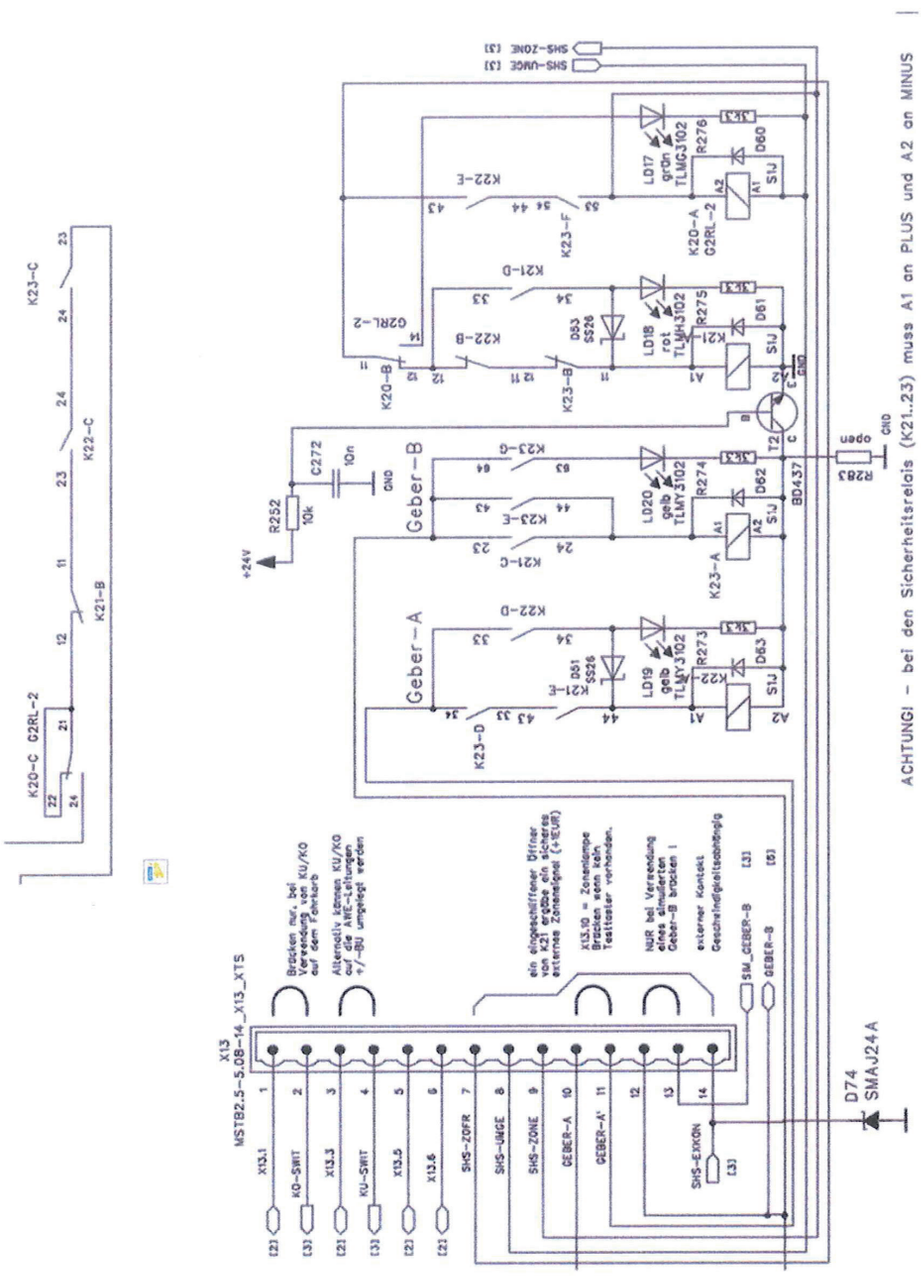

Figure 1: Portion of the wiring diagram for the control system of the door zone bypass

The English text is a translation of the German original. In case of any discrepancy, the German version is valid only.

Page 2 of 9

Annex of the EU Type Examination Certificate
No. EU-ESD 024 of 2016-10-04

TÜV SÜD
Industrie Service

Depicted on the following page is the wiring diagram of the safety circuit scan control an- safety circuit bypass control (figure 2).

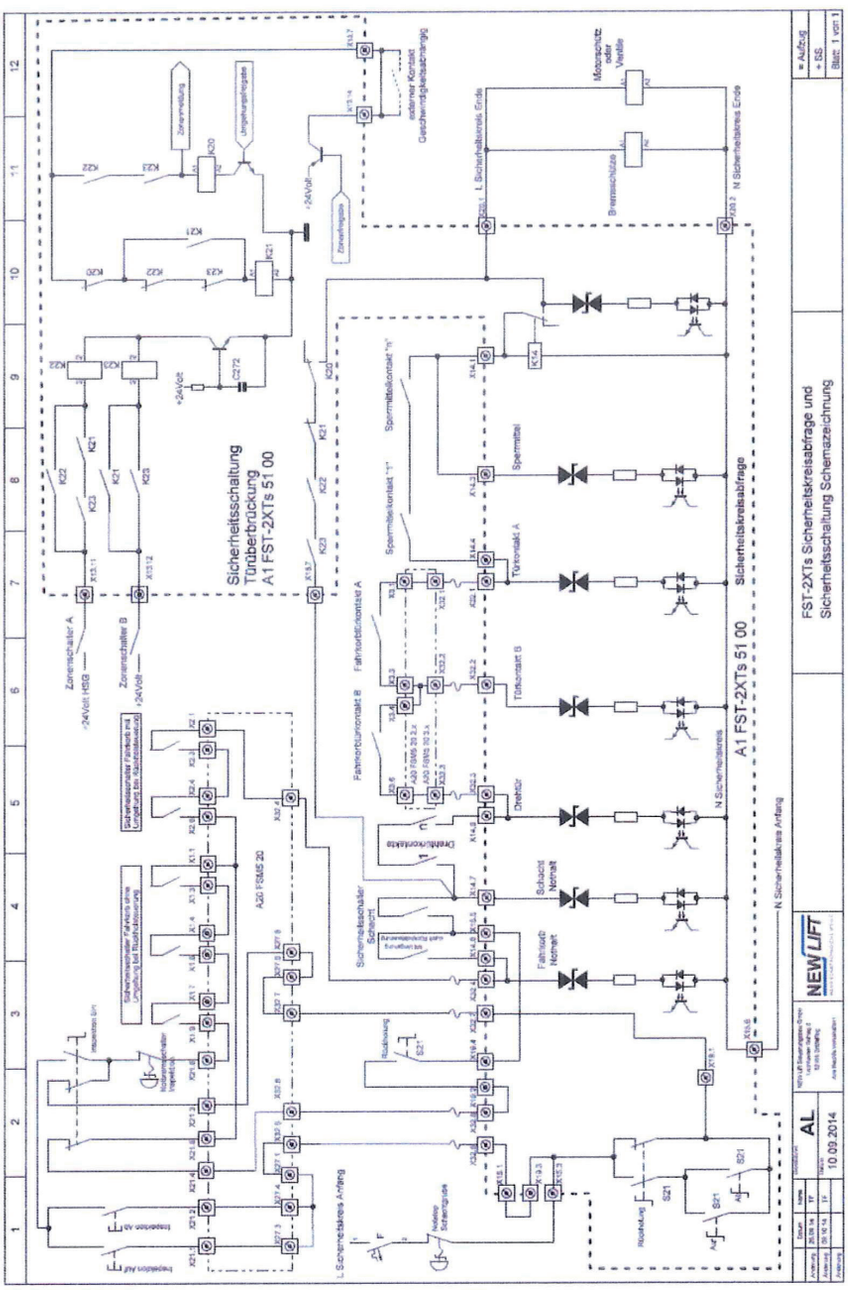

Figure 2: Wiring diagram of the safety circuit scan control and safety circuit bypass control Type FST-2XTs

.

Annex of the EU Type Examination Certificate
No. EU-ESD 024 of 2016-10-04

Industrie Service

1.2 Description of the function against unintended car movement

For the device as a detecting and, if necessary, triggering element: if combined with a braking element tested in accordance with A3, e.g., in the form

a) of a drive brake for electrically operated rope lifts,

b) of a safety valve or similar for hydraulically driven lifts, this can represent the detecting as well as the triggering element of the entire protective device against the unintended movement of the car. If, on the other hand, the device is combined with a braking element tested in accordance with A3, e.g., in the form

c) of a double-acting safety gear/braking device triggered by a speed limiter tested in accordance with A3 as a triggering element – for both electrically operated rope lifts as well as with hydraulically driven lifts – this can only represent the detecting element of the entire protective device against the unintended movement of the car.

1.2.1 Electrically operated passenger and freight lifts

The safety circuit bypass control is only activated by the control system if firstly the target floor has been reached and secondly the measured car speed is ≤ 0.2 m/s.

The safety circuit bypass control, when triggered, i.e.,

- if the door zone (defined by two magnet switches) is exited as well as
- before the door zone is exited with a speed of ≥ 0.2 m/s with unlocked landing door and/or open car door,

ensures a safe shutdown of the downstream drive components and, subsequently,

- either the triggering of the braking element according to cases (a.) and (b.) in the comment of the previous section
- or the activation of the triggering element of the protective device against the unintended car movement in cases of the combination specified in (c). of the previous section.

The car speed is detected by the control system via the encoder of the shaft positioning system. For additional safety (redundancy), a speed-dependent contact of the frequency inverter is integrated at the terminals of the control system – A1:X13.7 and A1:X13.14. It is thereby ensured that the safety circuit bypass control is also inactive (safety circuit open) if the frequency inverter detects a car speed of more than 0.2 m/s.

1.2.2 Hydraulically operated passenger and freight lifts

In principle, the function is identical to that of electrically operated passenger and freight lifts (electrically operated rope lifts), but without monitoring of the car speed.

Annex of the EU Type Examination Certificate
No. EU-ESD 024 of 2016-10-04

Industrie Service

1.2.3 Electrically as well as hydraulically operated passenger and freight lifts

In order to adhere to the permissible total stopping distance in the case of an unintended car movement, the length of the door zone must be limited depending on the installation and its maximum length calculated during the course of planning the lift system.

For the device in question, the reaction times of the detecting element (sensors and their control system) as well as the reaction times and reaction distances of the triggering element and those of the braking element(s) in addition to the maximum possible acceleration by the drive in the event of an error (if applicable) and the mass ratios and other factors that influence the movement of the lift system (compensation tools, rope lengths depending on the type of rope arrangement and drive arrangement,...) are known for this purpose.

The calculated, maximum door zone size must be entered in the menu of the control system during commissioning. During the automatic learn drive, the actually specified door zone lengths are automatically checked for correctness at all floors by the control system.

During tests of the lift system in the course of the conformity assessment procedure, tests "UCM-A3 test upward" and "UCM-A3 test downward" are to be performed in the test menu of the FST controller.

This ensures that the UCM case is performed with the assistance of the UCM test relay under safe conditions, i.e., with closed car door and locked landing door.

Both UCM cases, the "exiting of the door zone" as well as "excessive speed" (only for electrically operated lifts with rope drive) with open car door(s) and/or unlocked landing door(s), are detected by the control system. The lift system is brought to a standstill with the "LSU-UCM-A3 Error" error message and can only be put back into operation by resetting the error message in the control system menu by a competent person.

In the case of a power failure, the "LSU-UCM-A3 Error" is stored and prevents the installation from being operated upon restoration of power.

Designation		Detection time
FST-2XTs safety circuit bypass control	Electr./mech. switching	10 ms
Contactor for brake / valves	Siemens 3RTxxx	12 ms
Zone magnet switch	Schmersal BN32r	
	Normally open (NO) contact switching time	0.3 - 1.5 ms
	Restarting precision	+ / - 0.25 mm
Speed signal > 0.2 ms	FST-2XTs	102 ms
Speed signal > 0.2 ms	Frequency inverter	15 ms

Annex of the EU Type Examination Certificate
No. EU-ESD 024 of 2016-10-04

Industrie Service

It is not mandatory that the specified types of "contactors for brake/valves" as well as "zone magnet switches" be used. The type can be selected based on the reaction and detection times of the "contactors for brake/valves" as well as the "zone magnet switches". If types other than those specified above are used, verification of the reaction and detection times is to be provided.

Shown on the following pages are the wiring diagram for rope-operated passenger and freight lifts (figure 3), the wiring diagram for hydraulically operated lift systems with shutoff valve as braking element (figure 4) as well as the wiring diagram for hydraulically operated lift systems with redundant lowering valves as braking elements (figure 5).

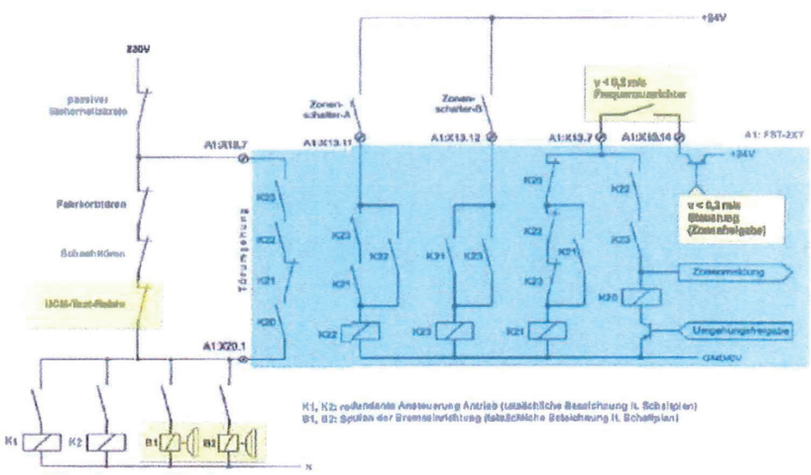

Figure 3: Wiring diagram for rope-operated passenger and freight lifts

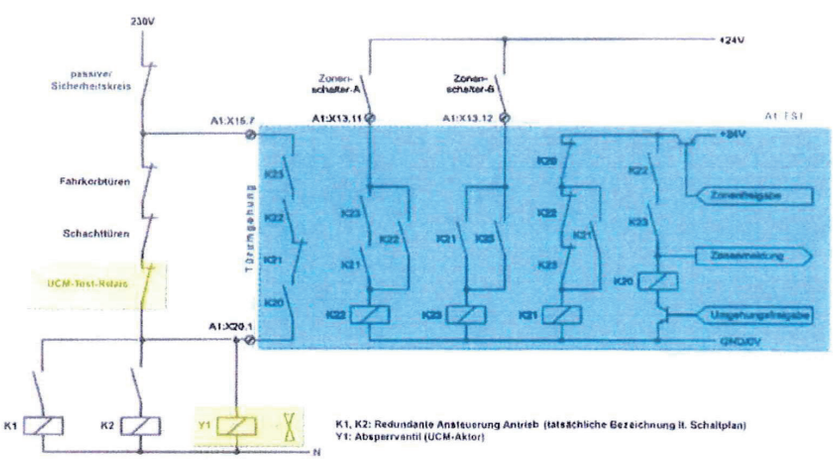

Figure 4: Wiring diagram for hydraulically operated lift systems with shutoff valve as braking element

Annex of the EU Type Examination Certificate
No. EU-ESD 024 of 2016-10-04

TÜV SÜD
Industrie Service

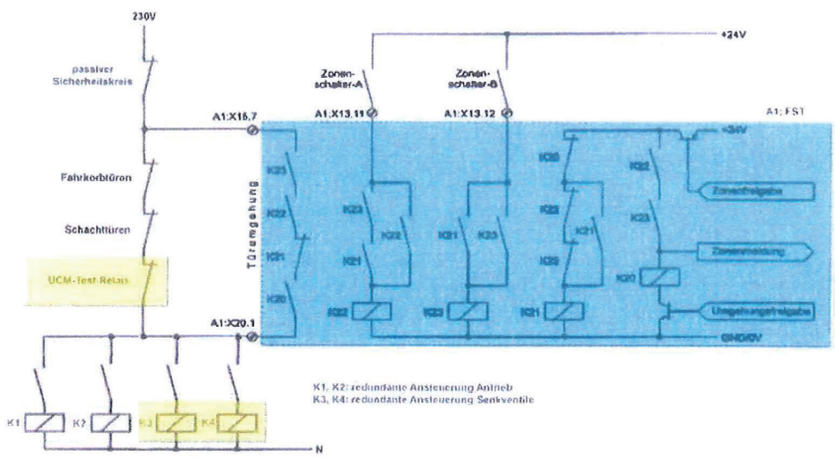

Figure 5: Wiring diagram for hydraulically operated lift systems with redundant lowering valves as braking elements

2 Conditions

2.1 The safety devices of the circuit board (tap for safety chain) are to be connected as specified in document BMP-Hinweise_FST-2XTs.

2.2 The safety circuit bypass control is integrated on the printed circuit board as a fixed component of the FST-2XTs 51 00 controller. It is designed for a temperature range from 0 to +65°C at a relative humidity of 15 to 85%.

2.3 The operating voltage is 24V DC, whereas the operating contacts and conductor paths are designed for a 230V AC (optional 48V DC, 110V AC) safety circuit, fuse-protected with max. 4A.

2.4 A closing contact from X20.1 to X14.1 is integrated in the controller for quick-start. Direct connection from X14.1 to X15.7 is not allowed.

2.5 The wiring must be implemented according to "FST-2XTs safety circuit scan control and safety circuit bypass control schematic drawing" figure 2 (e.g., N-wire at X15.6, return wire of the contactors and valves at X20.2; X14.1 not connected to X15.7).

2.6 If the braking element is supplied with power directly via the electric safety circuit, redundant activation of the braking element is not necessary. If the braking element requires a voltage other than that available directly from the electric safety circuit, redundant activation with standstill monitoring is necessary.

Annex of the EU Type Examination Certificate
No. EU-ESD 024 of 2016-10-04

Industrie Service

2.7 If the braking element is not involved in the checking of the speed or deceleration in normal operation or does not stop the car in normal operation but is rather only responsible for braking in the UCM case, it is not necessary to monitor the proper function of the braking element.
Otherwise, the proper opening or closing of the braking element via the contacts required for this purpose is necessary via the control software.

2.8 Use only in combination with:
- Control systems manufactured by NEW *LIFT*, model FST-2XTs

2.9 For electrically operated rope lifts, a signal must be made available to the control system in the event of speeds in excess of 0.2 m/s.

2.10 The subcomponents described in this certification must be supplemented with another subcomponent for the realisation of the "UCM-A3 function".
For this purpose, assembly operation must adhere to the requirements before performing the conformity assessment procedure.

2.11 For hydraulically operated lift systems, items 3.6, 3.7, 3.7.1, 3.7.2 and 5 of the UCM-A3 manual are to be adhered to during commissioning or recurring inspections and maintenance.

2.12 For electrically operated rope lift systems, items 4.6, 4.7, 4.7.1, 4.7.2 and 5 of the UCM-A3 manual are to be adhered to during commissioning or recurring inspections and maintenance.

2.13 The "UCM-A3" manual is to be included with the product.

2.14 The EU type examination certificate may only be used together with the corresponding appendix and attachment (manufacturer list for serial production). This attachment is updated according to information from the manufacturer / representative and published with the updated information.

3 Notices

3.1 This EU type examination certificate was prepared on the basis of the following harmonised standards:

- EN 81-1:1998 + A3:2009 (D), Appendix F.8
- EN 81-2:1998 + A3:2009 (D), Appendix F.8
- EN 81-20:2014 (D), Item 5.11.2.3
- EN 81-50:2014 (D), Item 5.6

In the event of changes or additions to the aforementioned standards or in the event of further developments to the state of the art, the EU type examination certificate must be revised.

3.2 The test results refer only to the "FST-2XTs" and "FSM-2" printed circuit boards with electronic components with taps in the safety circuit and safety circuit bypass control as well as subsystem against unintended car movement and the associated EU type examination.

Annex of the EU Type Examination Certificate
No. EU-ESD 024 of 2016-10-04

Industrie Service

3.3 At the "detection device for unintended car movement (UCM) – door zone" a sign must be present (e.g., near the control system) with details on the identification of the component with the name of the manufacturer, EU type examination designation and type plate.

3.4 In the event of changes or deviations from the version documented here, an examination and, if necessary, adaptation of the alternative measures is required by the notified body.

3.5 This certificate is based on the state of the art, which is documented by the currently valid harmonised standards. If the event of changes or additions to these standards or in the event of further advances in the state of the art, a revision may become necessary.

The English text is a translation of the German original. In case of any discrepancy, the German version is valid only.

Page 9 of 9

NEW *LIFT*
NEUE ELEKTRONISCHE WEGE

EU Declaration of Conformity

According to the EU-directive

Product description:

Printed circuit boards FST-2XTs (FST 51 00) and FSM-2 (FSM 5 20) with electronic components, pick-off connections in the safety circuit and safety bypass control as well as partial system against unintended car movement for passenger and goods lifts.

Device types: „FST-2XTs“ and „FSM-2“ in all delivered versions

The EU-type examination (Certificate-no.: EU-ESD 024) was conducted by the TÜV SÜD Industry Services GmbH, ID-Nr.: CE0036.

Manufacturing control according to QM-System ISO 9001:2015 and ARL 2014/33/EU Annex VI is carried out by the Association for Technical Inspection (TÜV Rheinland Industrie Service GmbH, ID-No.: CE0035).

The named control boards were developed, constructed and produced in accordance with the Council Directives on the approximation of the laws of the Member States.

- Low Voltage Directive 2014/35/EU
- EMC-Directive 2014/30/EU
- Lift Directive 2014/33/EU

The following standarts have been considered for the evaluation of the control board:

- EN81-20 /50:2014
- EN12015:2014
- EN12016:2013
- [EN 81-1/2: 1998 + A3:2009]

There exists a complete technical documentation. The manual for the devices is available. The safety instructions of the delivered manual must be observed! This declaration confirms the conformity of the mentioned standards and directives. It does not, however, include a guarantee of characteristics.

Graefelfing, 04.04.2019

Legally binding signature:

Peter Zeitler, Managing Director

NEW *LIFT* - Neue elektronische Wege Steuerungsbau GmbH
Lochhamer Schlag 8 - 82166 Graefelfing - Germany

NOTES

NOTES

NEW LIFT
NEUE ELEKTRONISCHE WEGE

NEW LIFT Neue Elektronische Wege
Steuerungsbau GmbH
Lochhamer Schlag 8
DE 82166 Gräfelfing

+49 (0) 89 898 66 0
+49 (0) 89 898 66 300
info@newlift.de
www.newlift.de

NEW LIFT
Service Center GmbH
Ruwerstraße 16
DE 54427 Kell am See

+49 (0) 6589 919 540
+49 (0) 6589 919 540 300
info@newlift-sc.de
www.newlift.de