NEW LIFT

NEUE ELEKTRONISCHE WEGE

eco

Home lift control system acc. to EN81-41

MANUAL

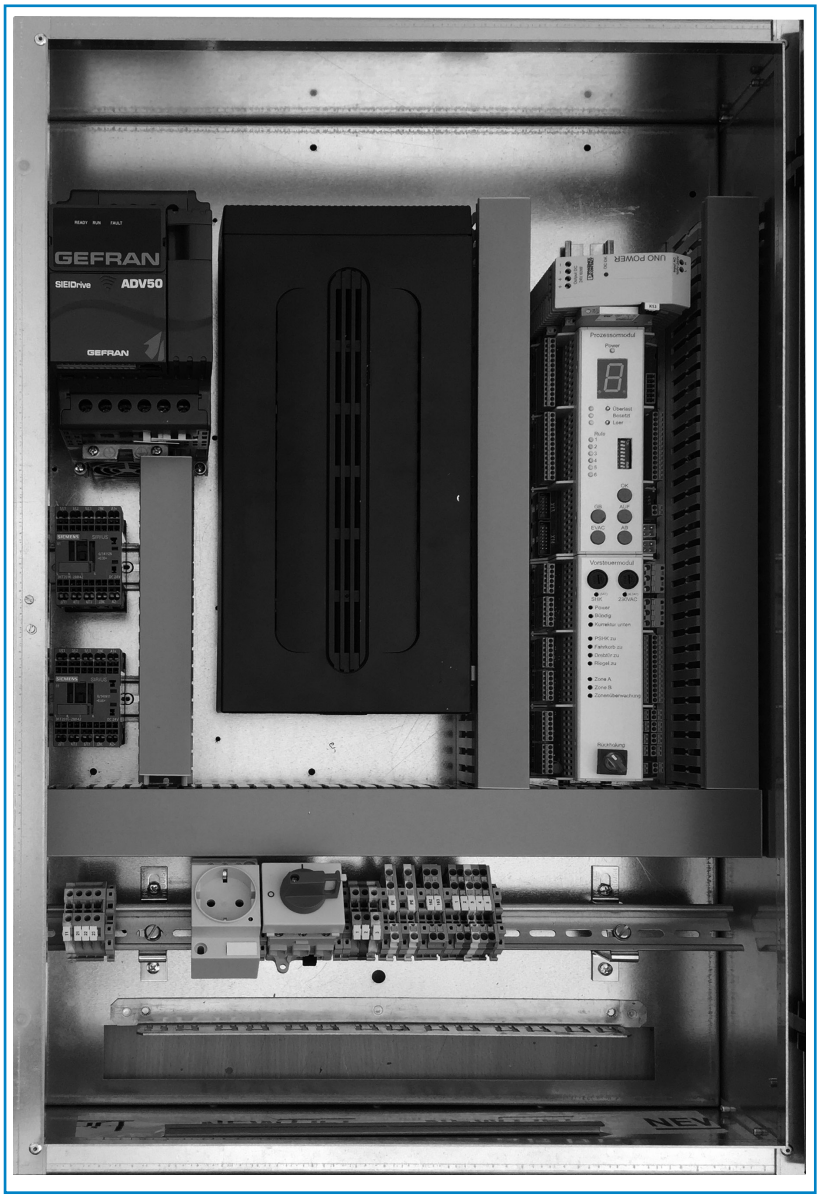

Manufacturer

NEW *LIFT* Service Center GmbH
Ruwerstraße 16
54427 Kell am See

Tel +49 6589 – 919 540
Fax +49 6589 – 919 540 – 300
E-Mail info@newlift-sc.de

www.newlift.de

Service line

Tel +49 89 – 898 66 – 110
Mail service@newlift.de

First version 17.03.2016

Author JW

Last change 07.09.2017 DU / EP

Release 11.09.2017 HW

Hardware version

Processor module: 9-00-30-ECO-PRZ
Display module: 9-00-30-ECO-BAZ
Preselection module: 9-01-30-ECO-VST

Software version ECO-01 V18

Doc. No. hb_eco_2017-09_en

Product overview

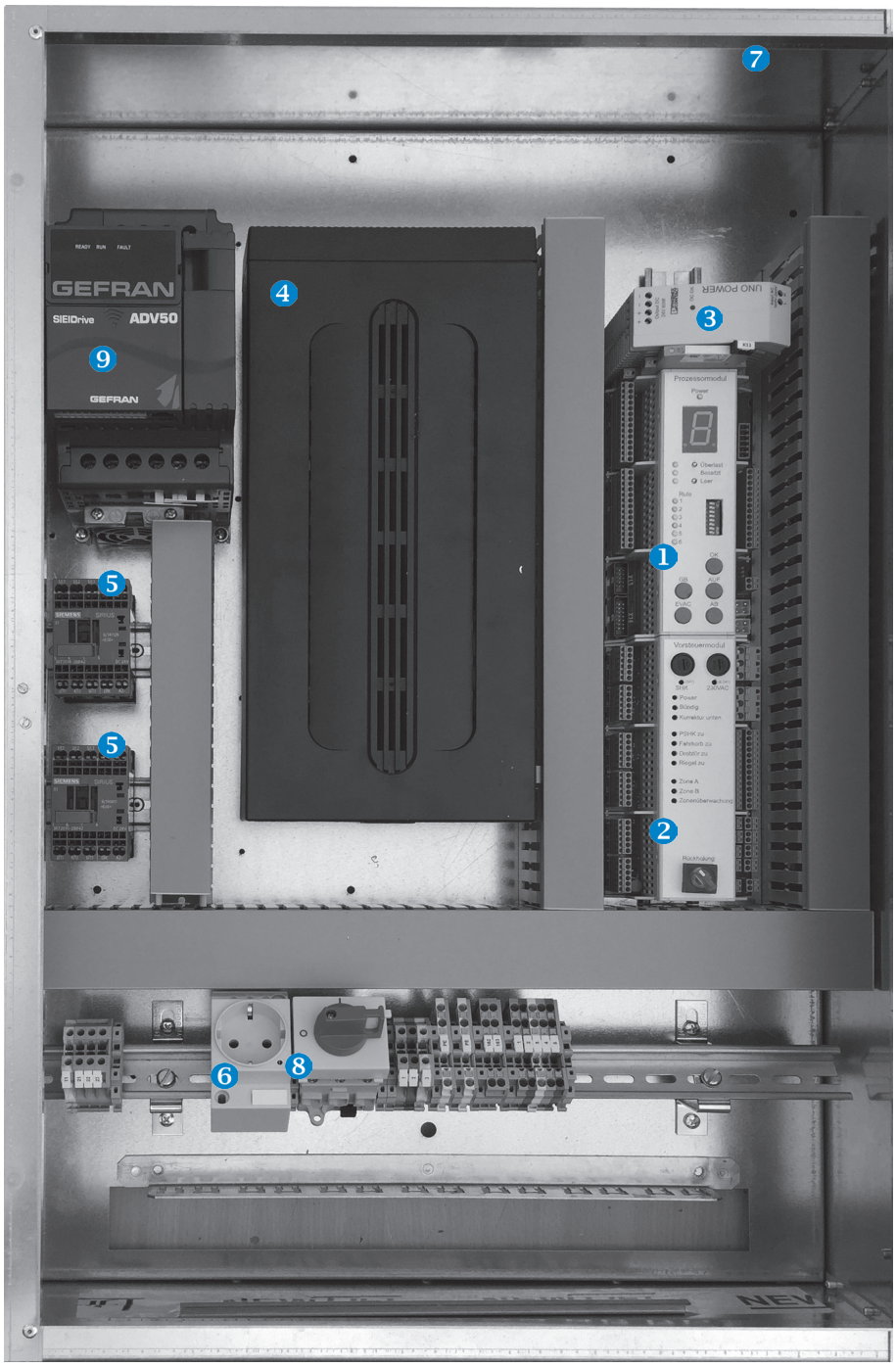

1. ECO processor module
2. ECO pre-control module
3. Power supply
4. UPS
5. Motor contactors K1, K2
6. Maintenance socket
7. Control cabinet lighting
8. Main switch
9. Frequency inverter

Content

1	**Information on this manual**	**6**
1.1	**Abbreviations, characters and symbols used**	**6**
1.2	**Further information**	**7**
1.3	**How to contact us**	**7**
2	**General safety regulations**	**8**
2.1	**Applicable standards and guidelines**	**8**
2.2	**Electromagnetic compatibility (EMC)**	**8**
2.3	**Handling electronic assemblies**	**8**
2.4	**General**	**8**
2.4.1	Qualifications of the installing engineer	8
2.4.2	Residual dangers	9
2.4.3	Safety regulations	9
3	**About the ECO**	**11**
3.1	**Purpose**	**11**
3.2	**Pin assignment**	**12**
3.2.1	Pin assignment ECO	12
3.2.2	Terminal assignment of terminal strip in control cabinet	14
3.2.3	Jumper/DIP switches in ECO processor module	15
3.2.4	Terminal assignment of car top box	16
4	**Installation**	**18**
4.1	**Delivery contents**	**18**
4.2	**Checking the delivery contents**	**18**
4.3	**Claiming damages during transport**	**18**
4.4	**Reordering ECO components**	**19**
4.5	**Installing the control cabinet**	**19**
4.6	**Connecting the control cabinet**	**20**
4.7	**Installing and connecting the travelling cable**	**20**
4.8	**Meaning of the display indicator of the ECO**	**21**
5	**Description of the functions available**	**22**
5.1	**Orientation drive after switching on.**	**22**
5.2	**Normal drive**	**22**
5.2.1	ECO basic	22
5.2.2	ECO premium	22
5.3	**Light curtain test (ECO basic)**	**23**
5.4	**Safely accessing the shaft pit**	**23**
5.5	**Safely accessing the car roof**	**23**
5.6	**Auxiliary mode control in the control cabinet**	**24**
5.7	**Inspection control on the car roof**	**24**
5.8	**Emergency evacuation (passenger evacuation)**	**25**
5.9	**Function of control panel buttons**	**26**

5.10 Online configuration 27
5.11 Functions for free I/O ports 28
6 Monitoring functions of ECO 30
6.1 Description of the functions available 30
6.2 Activation of individual monitoring functions 31
7 Activation of special options 32

1 Information on this manual

The ECO was specially designed for platform lifts in accordance with EN81-41. It is preconfigured for max. 6 floors and is available in two variants:

- ECO basic: platform lift without car door with dead man control

- ECO premium: platform lift with car door and self-driving control system

Please read this manual carefully before installing and commissioning the ECO. Also see Chapter 2 „General safety regulations“.

This manual will help you during installation and commissioning of the ECO and its components. This manual contains important information for safe and proper installation and commissioning of the ECO controller.

Following these instructions will help to:

- prevent danger

- avoid repair costs and downtime

- increase the reliability and service life of the ECO and the platform lift.

Local, national and on-site regulations regarding health and safety and protection of the environment must be taken into account in addition to this manual.

This manual only describes the assemblies of the platform lift delivered by NEW *LIFT*. For information on components that were not manufactured and supplied by NEW *LIFT*, please refer to the respective user information supplied by the manufacturer or supplier.

1.1 Abbreviations, characters and symbols used

Symbol/ abbreviation	Meaning
ECO	ECO home lift control system
I	Input
O	Output
I/O	Input/output
✶	**Delivery condition** Settings that are supplied as standard are marked with an asterisk ✶.
▶	**Operational instructions** Perform the tasks that follow this symbol in the specified order.
⚠	**Safety information** This symbol is located in front of safety-relevant information.
ⓘ	**Information notice** This symbol is located in front of relevant information.

1.2 Further information

The following documents, among others, are available for the ECO and its components:

› Function description of the ECO home lift control system
› Wiring diagram example: ECO basic/premium

This and other current manuals can be found in the download area of our website under "Service": *http://www.newlift.de/en/service/download*

1.3 How to contact us

Should you require support, our service line is there for you:

Tel +49 6589 – 919 540
Mail info@newlift-sc.de

Mon. - Thurs.: 8:00 a.m. – 12:00 p.m. and 1:00 p.m. – 5:00 p.m.
Fr: 8:00 a.m. – 3:00 p.m.

2 General safety regulations

The ECO may only be operated in perfect working condition in a proper manner, safely and in compliance with the manual, the valid accident prevention regulations and the guidelines of the local power company.

The safety guidelines of all NEW *LIFT* control system series apply for this product.

2.1 Applicable standards and guidelines

The ECO complies with ...

› **DIN EN 81 - 41:** *safety rules for the construction and installation of vertical lifting platforms intended for persons with impaired mobility*,
› **DIN VDE 0100**: *conditions for the erection of high voltage installations with nominal voltages up to 1 kV*,
› **VDE 0106**: *the contact protection measures in the machine room*,
› **Data sheet ZH 1/312:** *safety measures for the installation, maintenance and commissioning of lift systems*.
› The new EC machinery directive **2006/42/EC**

2.2 Electromagnetic compatibility (EMC)

The HST and its components were inspected by an accredited inspection authority in accordance with the limit values and severity levels stated in **EN 12015/1995** and **EN 12016/1995**.

The HST and its components are...

› immune to electrostatic discharge (**EN 61000-4-2/1995**)
› immune to electrostatic fields (**EN 61000-4-3/1997**)
› immune to fast transient disturbances (**EN 61000-4-4/1995**)

The electromagnetic disturbance field strengths created by the HST and its components do not exceed the permissible thresholds (**EN 55011/1997**).

2.3 Handling electronic assemblies

› Keep the electronic assembly in its original packaging until installation to prevent damage.
› Before opening the original packaging, a static discharge must be performed!
To do this, touch a grounded piece of metal.
› During work on electronic assemblies, periodically repeat this discharge procedure!
› Equip all bus inputs/outputs not in use with a terminal resistor (terminator) to prevent malfunctions.

2.4 General

2.4.1 Qualifications of the installing engineer

All persons performing installation and commissioning work on the ECO must read this chapter and follow its regulations.

Laws, regulations, guidelines and standards that apply in the country of operation must be followed in addition to the safety regulations mentioned in this manual.

The installing engineer must:

- be over 18 years of age (exception: apprentices who are over 16 years of age and are permanently supervised by an engineer qualified for training apprentices).
- have first aid training.
- have theoretical and practical knowledge of regulations and measures for the prevention of fire and explosions in his work area.
- be able to identify, avoid and rectify all dangers that might occur during his work in the lift shaft and in the operating rooms.
- be able to identify and rectify all irregularities and faults that might occur during installation and operation of a lift system.
- have theoretical and practical knowledge of operating principles and requirements of electric controls and drive systems.

All installation and commissioning work on electric and electronic components of the ECO must be performed by or supervised by a qualified electrician.

A qualified electrician has appropriate training and knowledge of regulations that allow him to judge the quality of the work performed and identify possible dangers (UVV, VGB 4, §2 (3)).

2.4.2 Residual dangers

- Danger to life! Do not touch live parts while working on electrical equipment
- Danger to life when falling down the lift shaft.
- Risk of injury when lifting or moving the control cabinet if it falls down or tips over.
- Risk of injury for persons in the lift shaft while the car is in motion.
- Risk of injury due to unexpected car movements.
- Destruction of the ECO Controller and its electronic assemblies by short circuits or excessive voltage.

2.4.3 Safety regulations

- The instructions of the lift manufacturer and the instructions in this manual must be followed during installation and commissioning of the lift system.
- The lift shaft must be secured against unauthorised trespassing during installation and commissioning.
- Assemblies, devices and cables must be installed securely and permanently.
- Loads must be moved with suitable aids (lift trucks, hoisting gear etc.).
- Sharp or pointed tools or other potentially dangerous objects must not be carried in the clothing unless sufficient protective measures are taken to avoid injuries.
- Alcohol and drugs must not be consumed before and during installation and commissioning.
- A copy of this manual and the order-specific wiring diagrams must be available to the installing engineer at the time of installing and commissioning the ECO and its components. A copy of this manual and the wiring diagrams must be kept in the control cabinet at all times after installation.
- The supplied, order-related wiring diagrams of the ECO are binding. Changes must only be made after consulting NEW *LIFT* and must be documented in writing on the system.
- The factory test logs of the ECO remain with NEW *LIFT*.

Electricity:

- Regulations for installing and operating electrical equipment (VDE0100) and regulations of local utilities must be followed.
- The specified distances between different electrical assemblies must be controlled and maintained.
- All installation work must be carried out with the system shut down and off circuit.
- All cables and wires must be installed with sufficient strain relief.
- The neutral and ground wires must be routed separately.

Working in the lift shaft:

- If the car is used as an assembly platform, the regulations from VGB 35: “building elevators” apply for the entire lift system.
- Any work in the lift shaft requires perfect and permanent communication between the supervisor on the ECO and the workers in the shaft.
- Parts in the lift shaft must be located and secured in a way that persons entering the lift shaft for inspection, maintenance or repair are not in danger. (AufzV, appendix 2.1.5)
- The maximum load of the lift system must not be exceeded.
- The specified overruns of the emergency end switches in relation to the speed must be observed.
- The emergency installations must not be activated during normal operation.
- All emergency installations and braking systems must be checked for troublefree operation at the beginning of each shift.
- During breaks, the car is to be moved to the lowest rest position, the controller must be switched off and the power supply must be interrupted.
- Installation and operation are prohibited if other persons could be in danger.
- Workers must be secured against falling.

Personal protective equipment of the installing engineer

- Eye protection
- Safety boots
- Protective helmet
- Safety harness
- Clothing suitable to the ambient conditions of the installation location
- Jewellery, watches or similar objects must not be worn

Waste disposal

- All packaging material must be disposed of in an environmentally acceptable manner.
- Paper, plastic, metal and electronic assemblies must be recycled.
- Adhesive residues must be disposed of in an environmentally acceptable manner in accordance with the governing laws and regulations.

3 About the ECO

3.1 Purpose

The term “home lift” or “platform lift” refers to a simple type-tested passenger lift in accordance with EN81-41 with frequency-regulated cable drive (open loop) or hydraulic drive (star/delta or soft-start) and fixed speed of v=0.15 m/s for use in private residences. This lift can serve up to six floors and requires a standard 230V AC 1-phase supply. The ECO home lift control system is available in two variants:

ECO BASIC:

- up to six floors in button-control mode (single-call mode)
- landing call acknowledgement is used as ‘Lift Here’ display
- no car door; monitored safety curtain used as guard
- manual shaft swing doors with fixed retiring cam and zone switching
- 24 V DC safety circuit, contactor and runtime monitoring
- landing calls are processed automatically
- car calls are processed in dead man mode
- magnetic positioning with level switch and correction switch (BC)
- zone switching with zone magnets for bridging the fixed retiring cam
- landing calls via flat cable
- monitoring of shaft doors, shaft pit and car roof
- 10 freely programmable I/O ports
- four controls:
    - cable drive with two speeds (GEFRAN frequency inverter)
    - cable drive with two speeds (GEFRAN frequency inverter) + readjustment
    - hydraulic drive with FAST-valve
    - hydraulic drive with star/delta or soft start and FAST-valve

ECO PREMIUM:

- all features of the ECO BASIC
- landing calls via LON bus with ADM-3 or EAZ-256/64 or EAZ-TFT.110 position indicator possible
- car calls via LON bus with EAZ-TFT.110 position indicator possible
- position indicators can be switched off after an adjustable time
- voice message via SAM speech computer or integrated in EAZ-TFT.110 position indicator possible
- control of an automatic car door
- automatic sliding landing doors or manual doors

On delivery, the ECO is preconfigured so that no parameter changes are necessary during installation and commissioning.

Technical data

General

Description	Value
Supply voltage	230 V AC ±10% / N / PE
Typical power consumption	500 mA – 6000 mA
Outputs	Short circuit-proof to 40V
Installation dimensions	WxHxD = 500x750x175 mm
Weight	55 kg
Temperature range: Storage & transport / operation	-20 – +70 °C / ±0 – +60 °C
Relative humidity: Storage & transport / operation (non-condensing)	+5 – +95 % / +15 – +85 %

3.2 Pin assignment

3.2.1 Pin assignment ECO

ECO processor module:

Terminal	I/O	Function
X0.1	O	Remote trigger of arrest +24V
X0.2	O	Remote trigger of arrest +0V
X0.5	O	Drive-motor brake +24V
X0.6	O	Drive-motor brake +0V
X1.1	O	Analogue load weighing +24V (potentiometer)
X1.2	O	Analogue load weighing +0V (potentiometer)
X1.3	I	Analogue signal for load weighing (potentiometer)
X1.5	O	Overload (digital)
X1.6	I	Overload (digital)
X2.1	O	Motor contactor K1.A1 (coil)
X2.2	O	Motor contactor K2.A1 (coil)
X2.3	O	Motor contactors K1/K2.A2 (coils)
X2.4	O	Motor contactors K1.13 and K1.11 (+24V for contact evaluation)
X2.5	I	Motor contactor K2.14 (NO normally open contacts)
X2.6	I	Motor contactor K2.12 (NC normally closed contacts - contactor monitoring)
X2.8	O	FU_M01 (frequency-inverter reference potential)
X2.9	I	FU_MCM (brake signal - lowside switch)
X2.10	O	FU_MI1 (direction of travel UP)
X2.11	O	FU_MI2 (direction of travel DOWN)
X2.12	O	FU_MI6 (SHK STOP)
X2.13	O	FU_V=0.05 (slow)
X2.14	I	FU_COM (common contact in frequency inverter)
X3.1	I	+24VDC supply voltage
X3.2	I	+0 V supply voltage
X4/5.1	I/O	LON_TXD
X4/5.2	I/O	LON_RXD
X4/5.3	I	+0 V supply voltage
X4/5.4	I	+24 V supply voltage
X11.1/2	O	+24V
X11.3	O	Car Here - floor 0
X11.4	O	Car Here - floor 1
X11.5	O	Car Here - floor 2
X11.6	O	Car Here - floor 3
X11.7	O	Car Here - floor 4
X11.8	O	Car Here - floor 5
X11.12	I/O	Travelling cable - replacement cable (connected with X24.13 on pre-control module)
X11.13/14	O	0V
X12.1/2	O	+24V
X12.3	I/O	Free I/O PORT 0
X12.4	I/O	Free I/O PORT 1
X12.5	I/O	Free I/O PORT 2
X12.6	I/O	Free I/O PORT 3
X12.7	I/O	Free I/O PORT 4
X12.8	I/O	Free I/O PORT 5
X12.9	I/O	Free I/O PORT 6
X12.10	I/O	Free I/O PORT 7
X12.11	I/O	Free I/O PORT 8
X12.12	I/O	Free I/O PORT 9

Terminal	I/O	Function
X12.13/14	O	0V
X13.1	I	Landing call - floor 0 (floor button)
X13.2	I	Landing call - floor 1
X13.3	I	Landing call - floor 2
X13.4	I	Landing call - floor 3
X13.5	I	Landing call - floor 4
X13.6	I	Landing call - floor 5
X13.7	I/O	Free I/O PORT 8
X13.8	I/O	Free I/O PORT 9
X13.9	O	0V
X13.10	O	+24V
X14.1	O	Extension SPI_CS_EN
X14.2	O	Extension SPI_CS
X14.3/8/12	O	Extension 0V
X14.4/11	O	Extension +24V
X14.5	O	Extension SPI_SDO
X14.6	I	Extension SPI_SDI
X14.7	O	Extension SPI_SCK
X14.9	O	Extension +5V
X14.10	I/O	Extension reset

ECO pre-control module:

Terminal	I/O	LED
X21.1	I	230VAC supply
X21.2	O	230VAC mains supply
X21.3	I	230VAC supply - car lighting
X21.4	I	N supply
X22.1	O	Travelling cable - N supply automatic door
X22.2	O	Travelling cable - 230VAC supply automatic door
X22.3	O	Travelling cable - 230VAC car lighting
X23.1	O	Travelling cable - +24V
X23.2	O	Travelling cable - 0V
X23.3	O	Travelling cable - +24V supply (occupied)
X23.4	I/O	Travelling cable - SHK from emergency stop circuit
X23.5	I/O	Travelling cable - SHK to folding support
X23.6	I/O	Travelling cable - SHK from emergency stop
X23.7	I/O	Travelling cable - SHK to light curtain
X23.8	I/O	Travelling cable - SHK from light curtain
X23.9	I	Travelling cable - Zone A
X23.10	I	Travelling cable - Zone B
X23.11	I	Travelling cable - correction downward (end switch)
X23.12	I	Travelling cable - levelled position 1 (end switch)
X23.13	I	Travelling cable - levelled position 2 (end switch: only with hydraulic drive)
X23.14	I/O	Travelling cable - connected to X24.14
X24.1	I	Travelling cable - car call floor 0
X24.2	I	Travelling cable - car call floor 1
X24.3	I	Travelling cable - car call floor 2
X24.4	I	Travelling cable - car call floor 3
X24.5	I	Travelling cable - car call floor 4
X24.6	I	Travelling cable - car call floor 5
X24.7	I	Travelling cable - emergency call button
X24.8	I	Travelling cable - door open button
X24.9	O	Travelling cable - horn - overload/emergency call
X24.10	O	Travelling cable - automatic door OPEN

Terminal	I/O	LED
X24.11	O	Travelling cable - automatic door CLOSED
X24.12	I	Travelling cable - automatic door COM
X24.13	I/O	Travelling cable - replacement cable (connected to X11.12 on processor module)
X24.14	I/O	Travelling cable - connected to X23.14
X31	I/O	SHK - FU_RB/RC
X32	I/O	SHK - emergency stop
X33	I/O	SHK - slack rope
X34	I/O	SHK - shaft-pit folding support
X35	I/O	SHK - locking
X36	I/O	SHK - top emergency limit point
X37	I/O	SHK - bottom emergency limit point
X38	I/O	SHK - speed limiter
X25.1	I	+24V supply
X25.2	I	+0V supply
X26.1	O	Horn - overload/emergency call +24V
X26.2	O	Horn - overload/emergency call 0V
X41-46.1	O	SHK - manual door (NC)
X41-46.2	I	SHK - manual door (NC)
X41-46.3	O	SHK - lock (NC)
X41-46.4	I	SHK - lock (NC)
X41-46.5	I	Monitoring of door emergency release (NC)
X41-46.6	O	Monitoring of door emergency release (NC)

3.2.2 Terminal assignment of terminal strip in control cabinet

ATTENTION!
Potential equalisation must be carried out in accordance with applicable regulations and guidelines (VDE, DIN, EN and ISO) depending on the power rating. The neutral and ground wires must be routed separately! All cables and wires must be secured with sufficient strain relief.

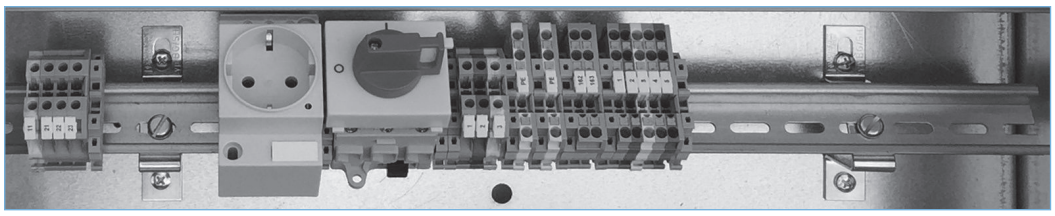

Fig. 3.1: Terminal strip in control cabinet

Terminal strip X1 (supply):

Terminal	I/O	Description
X1.1	I	Supply L1 230VAC +-10% (fuse-protection of 16A to be provided by the customer)
X1.2	I	Supply N
X1.3	I	Supply PE
X1.11	O	Drive motor PE of the motor cable
X1.12	O	Drive motor U
X1.13	O	Drive motor V
X1.14	O	Drive motor W
X1.PE	O	Drive motor shielding of the motor cable (only with cable lift)
X1.15	O	Drive motor U2 (only with hydraulic lift)

Terminal	I/O	Description
X1.16	O	Drive motor V2 (only with hydraulic lift)
X1.17	O	Drive motor W2 (only with hydraulic lift)

Terminal strip X2 (only with hydraulic lift):

Terminal	I/O	Description
X2.1/2	O	Valve - DOWN
X2.3/4	O	Valve - UP
X2.5/6	O	Valve - slow/fast
X2.7/8	O	Valve - emergency lowering/locking

Terminal strip X40 (peripherals):

Terminal	I/O	Description
X40.1/2	O	PTC resistor - motor (only with cable lift)
X40.3/4	O	Motor brake (only with cable lift)
X40.5/6	I	Smoke detector (optional)
X40.7-9	I	Door CLOSE button - landing (optional)
X40.10/11	I	Temperature sensor - drive motor (only with hydraulic lift)
X40.12	O	Emergency call filter - changeover contact (12)
X40.13	O	Emergency call filter - changeover contact (11)
X40.14	O	Emergency call filter - changeover contact (14)
X40.15	O	Collective fault - changeover contact (12)
X40.16	O	Collective fault - changeover contact (11)
X40.17	O	Collective fault - changeover contact (14)
X40.18	O	Locking solenoid - changeover contact (12)
X40.19	O	Locking solenoid - changeover contact (11)
X40.20	O	Locking solenoid - changeover contact (14)

3.2.3 Jumper/DIP switches in ECO processor module

J1: Basic: switch off dead man control for car calls
Premium: car calls as dead man control

J2: manual changeover to ECO premium
J3: ECO premium with manual doors

DIP-1: auxiliary mode/inspection, slow only
DIP-2: homing drive also with cable drive
DIP-3,4 00 - cable drive with GEFRAN frequency inverter
01 - cable drive with GEFRAN frequency inverter + readjustment
10 - hydraulic drive with FAST valve
11 - hydraulic drive with soft- or star/delta-start and FAST valve
DIP 5-8: reserved (for development)

3.2.4 Terminal assignment of car top box

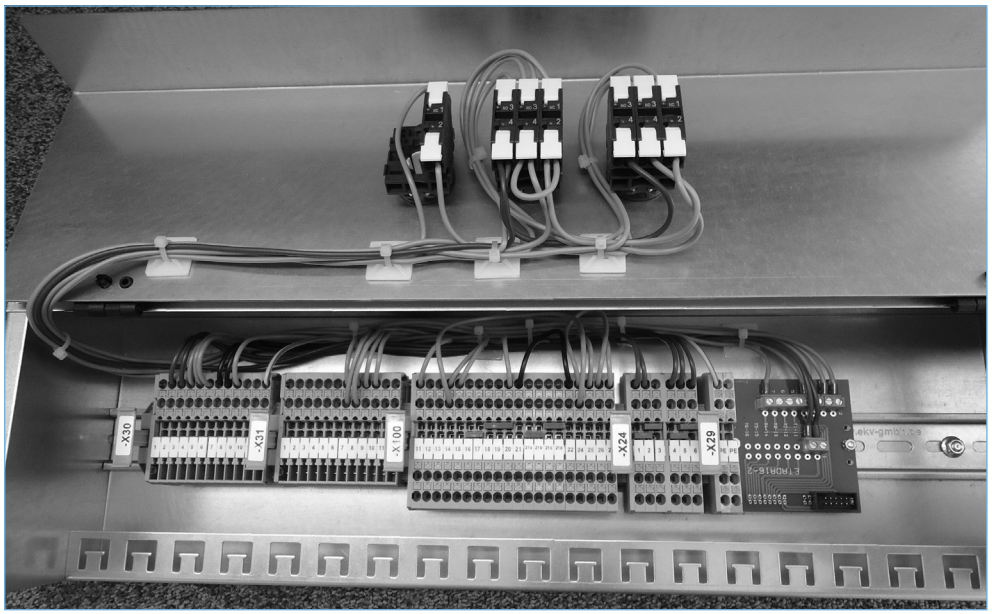

Fig. 3.2: ECO car top box

Terminal strip X29 (travelling cable - 230V car):

Terminal	I/O	Description
X29.1	O	Travelling cable - power supply N
X29.2	O	Travelling cable - power supply - car door 230V
X29.3	O	Travelling cable - power supply - car lighting 230V
X29.PE	O	Travelling cable PE

Terminal strip X30 (travelling cable - safety circuit, zone, end switch):

Terminal	I/O	Description
X30.1	O	Travelling cable - +24V
X30.2	O	Travelling cable - 0V
X30.3	O	Travelling cable - +24V supply (occupied)
X30.4	I/O	Travelling cable - SHK from emergency stop circuit
X30.5	I/O	Travelling cable - SHK to folding support
X30.6	I/O	Travelling cable - SHK from emergency stop
X30.7	I/O	Travelling cable - SHK to light curtain
X30.8	I/O	Travelling cable - SHK from light curtain
X30.9	I	Travelling cable - Zone A
X30.10	I	Travelling cable - Zone B
X30.11	I	Travelling cable - correction downward (end switch)
X30.12	I	Travelling cable - levelled position 1
X30.13	I	Travelling cable - levelled position 2 (only with hydraulic drive)
X30.14	I/O	Travelling cable - connected to X24.14

Terminal strip X31 (travelling cable - calls, door):

Terminal	I/O	Description
X31.1	I	Travelling cable - car call floor 0
X31.2	I	Travelling cable - car call floor 1
X31.3	I	Travelling cable - car call floor 2
X31.4	I	Travelling cable - car call floor 3

Terminal	I/O	Description
X31.5	I	Travelling cable - car call floor 4
X31.6	I	Travelling cable - car call floor 5
X31.7	I	Travelling cable - emergency call button
X31.8	I	Travelling cable - door open button
X31.9	O	Travelling cable - horn - overload/emergency call
X31.10	O	Travelling cable - automatic door OPEN
X31.11	O	Travelling cable - automatic door CLOSED
X31.12	I	Travelling cable - automatic door COM
X31.13	I/O	Travelling cable - replacement cable (connected to X11.12 on processor module)
X31.14	I/O	Travelling cable - connected to X23.14

Terminal strip X100 (safety circuit):

Terminal	I/O	Description
X100.11	O	Arrest switch (11)
X100.12	I	Arrest switch (12)
X100.13	O	Slack rope switch (11)
X100.14	I	Slack rope switch (12)
X100.15	O	Emergency stop - car roof (11)
X100.16	I	Emergency stop - car roof (12)
X100.17	O	Emergency stop - car (11) - only with ECO basic with manual doors
X100.18	I	Emergency stop - car (12) - only with ECO basic with manual doors
X100.19	O	Car door (11) - only with automatic doors
X100.20	I	Car door (12) - only with automatic doors
X100.21	O	Light curtain 1 (gn) - only with ECO basic with manual doors
X100.21a	I	Light curtain 1 (gr) - only with ECO basic with manual doors
X100.21b	O	Light curtain 2 (gn) - only with ECO basic with manual doors
X100.21c	I	Light curtain 2 (gr) - only with ECO basic with manual doors
X100.21d	O	Light curtain 3 (gn) - only with ECO basic with manual doors
X100.22	I	Light curtain 3 (gr) - only with ECO basic with manual doors
X100.23	O	Folding support - car roof - NC (11)
X100.24	I	Folding support - car roof - NC (12)
X100.25	O	Folding support - car roof - NO (13)
X100.26	I	Folding support - car roof - NO (14)

Terminal strip X101 (24V supply):

Terminal	I/O	Description
X101.1-3	O	+24V supply
X101.4-6	O	+0V supply

Floor adapter A140 (car calls / Lift Here):

Terminal	I/O	Description
1	I/O	Travelling cable - car call / Lift Here - floor 00
2	I/O	Travelling cable - car call / Lift Here - floor 01
3	I/O	Travelling cable - car call / Lift Here - floor 02
4	I/O	Travelling cable - car call / Lift Here - floor 03
5	I/O	Travelling cable - car call / Lift Here - floor 04
6	I/O	Travelling cable - car call / Lift Here - floor 05
7	I/O	Travelling cable - door OPEN button
8	I/O	Travelling cable - emergency call button - NO
9	O	Travelling cable - power supply - car calls / Lift Here GND
10	O	Travelling cable - power supply - car calls / Lift Here +24 V

4 Installation

All important information on the installation procedure, installation conditions and settings for the ECO components are described in this section. Special circumstances at the installation site may require an installation procedure that differs from the one recommended here.

4.1 Delivery contents

ECO components and documentation:

› Control cabinet HST WxHxD = 500x750x175 mm
› Control-cabinet fastening set
› Wiring diagram
› ECO operating instructions (this manual)
› Frequency inverter operating instructions
› Brake resistor - inverter
› ECO car top box as sheet-metal box with terminal blocks and car call adapter
› Magnet switch (incl. connection cable, 2 m)
› Magnets
› Travelling cable for all 24V and 230V signals, prefabricated
› Travelling cable holder set
› Cable, Ölflex, 5 x 1 mm² - for car door drives and car installation
› Cable, Ölflex, 3 x 1 mm² - for car light and car installation
› Motor cable, 4 x 2.5 mm², shielded
› Cable, 3 x 1 mm², shielded for brake and motor thermistor
› Cable, Ölflex, 6 x 0.75 mm², for shaft doors
› Cable, Ölflex, 4 x 1 mm² - for safety circuit switch - shaft and monitoring switch of shaft doors
› EMERGENCY-OFF palm button for shaft pit
› Cable duct, 60 x 40 mm for shaft (delivered in two-metre rods)
› Car operating panel
› Call button AT33RM for shaft door frame (incl. 30 m flat cable and plug)

4.2 Checking the delivery contents

► Use the shipping note, the system drawing and the wiring diagram to check the delivered ECO components for completeness
► Visually inspect the delivery for damage
► When unpacking the delivery, check:
- whether there is any visible mechanical damage on the ECO components
- whether the labelling of the ECO components matches the designation in the wiring diagram
- whether the supplied cables are of sufficient length and quantity

4.3 Claiming damages during transport

If any damage occurred during transport, it must immediately be reported to the carrier.

4.4 Reordering ECO components

If any ECO components or cables are missing, contact the NEW *LIFT* hotline immediately. We will need the following information in order to help you as quickly as possible:

› 8-digit NEW *LIFT* factory number, e.g.: EP140181 (can be found in the wiring diagram)
› Designation of the missing component (can be found in the wiring diagram)
› Type and length of missing cable
› Your phone/fax number or e-mail address so we can contact you if necessary

4.5 Installing the control cabinet

► Transport the control cabinet to the planned installation location and install it there
► The type of mounting brackets to be used depends on the installation location and the weight of the control cabinet and is to be selected by the installing engineer.
► Install the supplied mounting bracket
► Mount the control cabinet with the upper edge in the installed mounting bracket
► Mark the cable entry through the opening in the mounting plate on the shaft wall
► Dismount the control cabinet again and make an opening into the shaft through the marked entry
► After you have again mounted the control cabinet, secure the control cabinet with an additional screw in the lower hole of the mounting plate
► The planned installation location can only be changed in exceptional cases, as the prefabricated cables might not be adequate. Please inform the NEW *LIFT* hotline so a solution can be found.

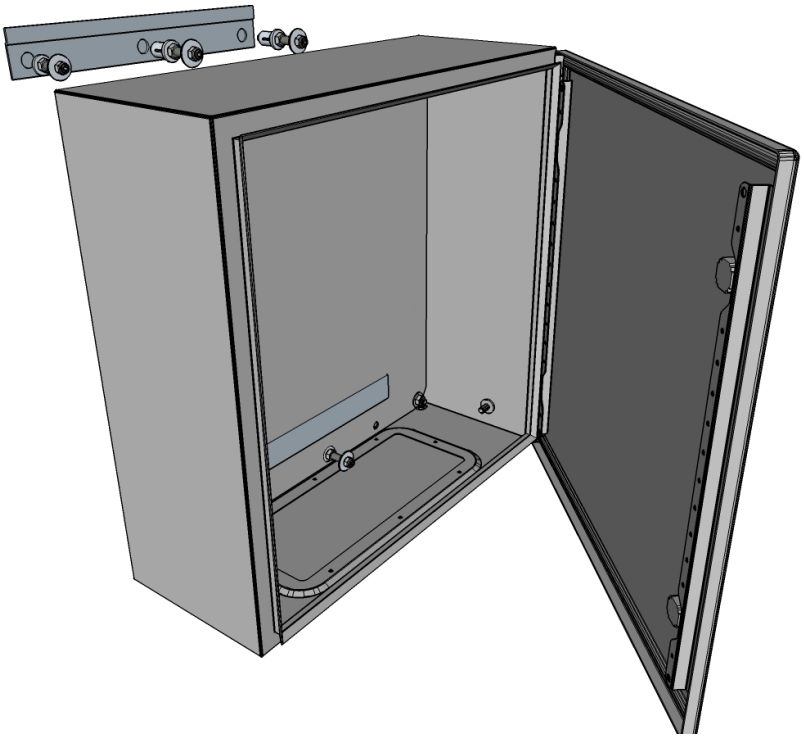

Fig. 4.1: Control cabinet installation

4.6 Connecting the control cabinet

ATTENTION!
Potential equalisation must be carried out in accordance with applicable regulations and guidelines (VDE, DIN, EN and ISO) depending on the power rating. The neutral and ground wires must be routed separately! All cables and wires must be secured with sufficient strain relief.

Customer wiring is shown in dashed lines in the wiring diagrams, factory wiring is shown in solid lines

ATTENTION!
The 230 V AC mains supply line at the installation site must be equipped with a protective device (fuse) for isolating the entire control system! The tripping current of this protective device should be 16A! The use of residual current devices (RCD) is not recommended.

Before commissioning the control cabinet, the following connections must be made according to the wiring diagram:

› Supply
› Drive
› Light
› Safety circuit

4.7 Installing and connecting the travelling cable

► Install the suspension brackets for the travelling cable in the shaft and on the car at a suitable location and hang the travelling cable.

The turning point of the travelling cable lies at approximately half the shaft height. The minimum bending radius of the travelling cable is 225 mm.

Note:

- the turning point of the flat trailing cable lies at half the

shaft height

- the installation direction of the flat trailing cable

On the NEW *LIFT* components, the flat trailing cable is plugged into the car and the control system (see “Car top box” on page 16).

4.8 Meaning of the display indicator of the ECO

The ECO is equipped with a 7-segment display for displaying the floor position and special states. The floor position is displayed on the system stand; in the event of special states, the display alternates every second between the floor position (without dot) and state (with dot). The following displays are possible:

Display	Type	Meaning
0 1 2 3 4 5	Info	Floor position
A.	Info	Auxiliary mode
b.	Error	DRM brake (K3 not released)
C.	Error	DRM correction switch (BC stuck)
d.	Info	In motion
E.	Info	Evacuation (intermittent brake)
F.	Info	Evacuation (emergency power, fire)
G.	Error	DRM shaft pit
H.	Error	DRM contactor monitoring
h.	Error	DRM over pressure/ low pressure (only hydraulic)
K.	Info	Re-levelling (correction)
L.	Error	DRM level switch (BU1/BU2 stuck)
n.	Info	Inspection
P.	Error	DRM light curtain
r.	Error	DRM runtime
t.	Info	Drive overheating
o.	Info	Orientation
ˉ.	Info	Car is located above the displayed floor
u.	Info	Car is located below the displayed floor
o.	Info	Overload
S.	Info	Door open
Z.	Error	Zone error (safety circuit)
2.	Info	Level switch missing in stand
9.	Error	DRM io-port

5 Description of the functions available

5.1 Orientation drive after switching on.

After switching on the ECO, an orientation drive is necessary in order to start the shaft positioning system correctly. If the lift is not on the bottom floor when the control system is switched on (on the correction switch), the display alternates between “-” and “o” and “-” is displayed on the position indicator. After the orientation delay has elapsed (= occupied time P1), the lift begins the orientation drive to the bottom floor. As soon as the correction switch and the level switch of the bottom floor are reached, the shaft positioning system begins operating, the display shows “0” and the lift is available for normal drive.

5.2 Normal drive

Normal drive is only possible if:

- Safety circuit is completely closed
- Auxiliary mode control is switched off
- Inspection control is switched off
- Door monitoring has not triggered
- No error message present in the ECO

5.2.1 ECO basic

- Landing calls are processed automatically; car calls are only processed in dead man operation.
- Only one call is possible at a time; it is not possible to collect calls.
- During the occupied time, only car calls are possible
- If the car call button is released early, the lift stops immediately.
- If the manual door is closed and the occupied time (P1) has elapsed, the lift is again available for landing calls.

5.2.2 ECO premium

- Landing and car calls are processed automatically.
- Only one call is possible at a time; it is not possible to collect calls.
- After arriving at the target floor, the retiring cam triggers with a delay (P4) and unlocks the manual door.
- After the retiring cam triggers, the car door opens with a delay (P5) and the open hold time (P6) starts.
- After opening and closing the manual door again, the car door closes with a delay (P7).
- Press the door CLOSE button to immediately close the car door if the manual door is closed.
- Press the door OPEN button to open the car door at any time as long as the car is stopped and level with a floor.
- As long as the car is loaded and active, the car door remains open, however.
- If the car door is closed and the occupied time (P1) has elapsed, the lift is again available for landing calls.

5.3 Light curtain test (ECO basic)

If the platform lift does not have a car door, the car entrance is monitored by a light curtain. The light curtain contact is in the safety circuit directly before the bolt contacts; it is not, however, in the safety circuit bypass control. As a result, an interruption of the light curtain results in an immediate emergency stop of the car. The power supply of the light curtain transmitter is switched via the “occupied” signal; the light curtain receiver has continuous voltage! The control system checks whether the lock input becomes active whenever the “occupied relay” triggers. This test ensures that the light curtain contact opens if the light curtain is interrupted. If this is not the case, the installation is shut down. A reset can only be performed by switching the main switch OFF / ON!

5.4 Safely accessing the shaft pit

If the shaft pit must be accessed for maintenance or repair work, proceed as follows:

- ► Send the car to any floor above the bottom floor
- ► On the ECO pre-control module, turn the dial to “MANUAL”; automatic commands are thereby prevented
- ► Check and ensure that no automatic commands are possible by placing a landing call on the bottom floor
- ► Unlock and open the bottom shaft door

DANGER!
Risk of injury due to unexpected car movements!

Before entering the shaft pit, always make sure that door monitoring (emergency release monitoring) has shut down the control system.
This is only the case if the Lift Here LED on the landing call button flashes and no landing calls are accepted after the shaft door is closed again!

DANGER!
Risk of injury due to unexpected car movements!

Before entering the shaft pit, the folding support in the shaft pit must be placed in a safe position!
Only in this way can it be reliably ensured that unintended car movements can be prevented and a sufficient protected space is available!

- ► Move the folding support in the shaft pit to a safe position that ensures a sufficient protected space; only then may you enter the shaft pit
- ► In addition actuate the emergency-stop switch in the shaft pit

5.5 Safely accessing the car roof

If the car roof must be accessed for maintenance or repair work, proceed as follows:

- ► Send the car to the bottom floor 00
- ► Unlock the shaft door of floor 01

DANGER!
Risk of injury due to unexpected car movements!

Before entering the car, always make sure that door monitoring (emergency release monitoring) has safely switched on the inspection control. This is only the case if the Lift Here LED on the landing call button flashes and no landing calls are accepted after the shaft door is closed again!!

DANGER!
Risk of injury due to unexpected car movements!

Before accessing the car roof, the folding support on the car roof must be placed in an upright position!
Only in this way can it be reliably ensured that unintended car movements can be prevented and a sufficient protected space is available!

- ► Check and ensure that no automatic commands are possible
- ► To do this, close the car door and place a landing call. The landing call must flash and the call must not be accepted.
- ► Unlock the shaft door of floor 01 again and open it
- ► Move the folding support on the car to an upright position that ensures a sufficient protected space; only then may you enter the car
- ► Also actuate the emergency stop switch on the car roof

5.6 Auxiliary mode control in the control cabinet

Auxiliary mode is activated via the Manual/Auto switch on the ECO pre-control module in the “Manual” position and operates in dead man operation via the “UP” and “DOWN” buttons. Switching on manual operation also acts as a fault reset. As a result, any faults that occurred when switching on manual operation can be reset.

5.7 Inspection control on the car roof

Inspection operation is automatically activated if the emergency release of a shaft door is actuated above the bottom floor. Inspection operation has priority over auxiliary mode and can only be cancelled by switching the control system off and back on again.

DANGER!
Risk of injury due to unexpected car movements!

Before entering the car, always make sure that door monitoring (emergency release monitoring) has safely switched on the inspection control. This is only the case if the Lift Here LED on the landing call button flashes and no landing calls are accepted after the shaft door is closed again!!

DANGER!
Risk of injury due to unexpected car movements!

Before accessing the car roof, the folding support on the car roof must be placed in an upright position!
Only in this way can it be reliably ensured that unintended car movements can be prevented and a sufficient protected space is available!

5.8 Emergency evacuation (passenger evacuation)

DANGER!
Risk of injury due to unexpected car movements!

Only instructed and authorised personnel may perform the evacuation (passenger evacuation)! An evacuation may only be performed in EMERGENCY SITUATIONS! Evacuation may only be performed on the nearest floor! NEVER bridge the safety devices!

Step 1: Calm down affected persons

► Calm down trapped persons with the car monitor (if available) or by calling out to them and tell them they will be freed. Tell the trapped persons to stay away from the car door and shaft wall.

Step 2: Localise the car

► Using the level LED on the ECO pre-control module, read whether the car is already in the level position:
► Within the door zone: level LED illuminates: switch main switch off „0“ and continue with step 5.
► Outside of the door zone: level LED does not illuminate: continue with step 3.

Step 3: Drive car into level position with auxiliary control

► By turning the MANUAL/AUTO switch to the “MANUAL” position and pressing the UP and DOWN buttons in the car, move the car in the UP or DOWN direction into the level position until the level LED illuminates.
► If the car cannot be moved with auxiliary control: continue with step 4

Step 4: Move car into level position with intermittent brake

► Switch off main switch Q1 “0”
► Switch on MANUAL operation (turn to left)
► Press and hold down the EVAC button; the car moves downward via the intermittent brake bit by bit
► As soon as the level LED illuminates, the lift stops automatically
► Switch back to AUTO operation

Step 5: Evacuate persons from the car

► Go to the floor in which the car is located.
► Only open the door here!
► Unlock shaft door with emergency key, open shaft and car door.
Caution! A tripping hazard may exist!
► Free trapped persons.

Step 6: Completing evacuation

► Close car and shaft doors and lock securely.
► Check to see that all shaft doors are locked!
► If locking isn‘t possible: Block access to the shaft! Danger of falling!
► Immediately inform the responsible maintenance firm!
► If the trapped persons cannot be freed, the troubleshooting service must be notified.
► Inform the responsible maintenance company when further operation is not possible.

5.9 Function of control panel buttons

Depending on the status of the controller and the type of operation the buttons OK, speed delimiter, EVAC, UP and DOWN in the control panel have different functions:

OK button ✓

- short actuation in the event of an error: fault reset (exception: shaft pit error)
- short actuation during normal operation: auto test drive ON
- short actuation during auto test drive: auto test drive OFF
- long actuation during auxiliary mode : toggle configuration mode
- short actuation in configuration mode: = toggle parameter between Navigation and Change

UP button ↑

- short actuation in normal operation = call next higher floor (and auto test drive OFF)
- short actuation + **EVAC** in normal operation = call to top floor (and auto test drive OFF)
- short actuation in configuration mode = increase parameter address or value
- long actuation in configuration mode: quickly automatic increase parameter address or value

DOWN button ↓

- short actuation in normal operation = call next lower floor (and auto test drive OFF)
- short actuation + **EVAC** in normal operation = call to bottom floor (and auto test drive OFF)
- short actuation in configuration mode = decrease parameter address or value
- long actuation in configuration mode = quickly automatic decrease parameter address or value

EVAC button

- actuation during auxiliary mode = activates intermittent brake (rope drive) or lowering valve (hydraulic drive) downward with intermittent brake until next level magnet

Speed delimiter button

- short actuation in normal operation = auto test drive OFF
- long actuation (>2s) during drive = trigger arrest/anti creep device
- long actuation (>2s) in configuration mode (navigation) = load factory setting

Software reset

- short actuation of **speed delimiter + EVAC + OK on stand**

5.10 Online configuration

Online configuration only functions on the stand with auxiliary mode control switched on. Use the OK, UP and DOWN buttons to change the individual parameters directly. In doing so, the parameter address is displayed via the call LEDs; the parameter values are depicted via the 7-segment display. During online configuration, the occupied LED flashes; normal function of the home lift is switched off while online configuration is being performed.

1. Switch on auxiliary mode
2. Press and hold down OK button for approx. 3s until the occupied LED flashes --> configuration mode
3. The call LEDs next to the DIP switches display the current parameter address.
4. Briefly press the OK button to switch between Navigation (flashing parameter address) and Change (bright parameter address).
5. Use the UP/DOWN button to search through the parameter list while in Navigation and to change the current parameter value while in Change. The changes take effect immediately without restarting.
6. Press the UP/DOWN button for longer than 3s to change the parameter address (Navigation) or to change the parameter value (Change) faster in the desired direction.
7. The 7-segment display changes cyclically between a ones digit (with dot) and tens digit (without dot). Single-digit parameter values are displayed without a tens digit.
8. If the speed delimiter button is pressed for approx. 2s while in Navigation, the factory settings are loaded and the control system restarts.
9. Keep the OK button pressed for approx. 3s until the occupied LED illuminates permanently --> Auxiliary mode active.
10. Switch off auxiliary mode.

No.	Call LEDs ⑥⑤④③②①	Meaning	Unit	Value range	Standard
P1	○○○○○●	Occupied time	[s]	5..99	5
P2	○○○○●○	Runtime control	[s]	5..45	45
P3	○○○○●●	Contactor monitoring	[100 ms]	5..30	10
P4	○○○●○○	Door-lock release time	[10 ms]	0..99	10
P5	○○○●○●	Door-open delay	[10 ms]	0..99	50
P6	○○○●●○	Door-open hold time	[s]	5..99	30
P7	○○○●●●	Door-open hold time after manual door	[s]	5..99	3
P8	○○●○○○	Active duration of intermittent brake	[10 ms]	1..99	20
P9	○○●○○●	Drive time T1	[10 ms]	0..255 (0..FFh)	100 (64h)
P10	○○●○●○	Drive time T2	[10 ms]	0..255 (0..FFh)	20 (14h)
P11	○○●○●●	Drive time T3	[10 ms]	0..255 (0..FFh)	20 (14h)
P12	○○●●○○	Function I/O port [0]	FKT-Nr.	0..15	4
P13	○○●●○●	Function I/O port [1]	FKT-Nr.	0..15	5
P14	○○●●●○	Function I/O port [2]	FKT-Nr.	0..15	6
P15	○○●●●●	Function I/O port [3]	FKT-Nr.	0..15	7
P16	○●○○○○	Function I/O port [4]	FKT-Nr.	0..15	8
P17	○●○○○●	Function I/O port [5]	FKT-Nr.	0..15	9
P18	○●○○●○	Function I/O port [6]	FKT-Nr.	0..15	0
P19	○●○○●●	Function I/O port [7]	FKT-Nr.	0..15	3
P20	○●○●○○	Function I/O port [8]	FKT-Nr.	0..15	1
P21	○●○●○●	Function I/O port [9]	FKT-Nr.	0..15	2
P22	○●○●●○	Coding of EAZ bits on ADM	Code	H, G, n	H
P23	○●○●●●	Floor text - floor 0	ASCII	0 .. 9, A .. U	0
P24	○●●○○○	Floor text - floor 1	ASCII	0 .. 9, A .. U	1
P25	○●●○○●	Floor text - floor 2	ASCII	0 .. 9, A .. U	2
P26	○●●○●○	Floor text - floor 3	ASCII	0 .. 9, A .. U	3
P27	○●●○●●	Floor text - floor 4	ASCII	0 .. 9, A .. U	4
P28	○●●●○○	Floor text - floor 5	ASCII	0 .. 9, A .. U	5
P29	○●●●○●	Switch off position indicator	[min]	0 .. 99	15
P30	○●●●●○	SAM volume	[%]	0 .. 99	50

No.	Call LEDs ⑥⑤④③②①	Meaning	Unit	Value range	Standard
P31	○●●●●●	Error-test flags	[Bits]	0 .. 255 (0.. FFh)	255 (FFh)
P32	●○○○○○	Anti-creep device time	[10 ms]	0	0
P33	●○○○○●	Special options	[Bits]	0 .. 255 (0.. FFh)	1 (01h)
P34	●○○○●○	Function extension port	*FKT-Nr.*	0 .. 1	0
P35	●○○○●●	Door open run time	[100 ms]	0 .. 99	50
P36	●○○●○○	parking time	[min]	0 .. 99	10
P37	●○○●○●	parking floor	[floor]	0 .. 5	0
P38	●○○●●○	Remote shutdown-floor	[floor]	0 .. 5	0

5.11 Functions for free I/O ports

The ECO is equipped with ten freely programmable I/O ports via which the additional functions can be realised. The following I/O functions can be used in this way:

Number	Function	Type	Standard port	ECO version
0	No function (unused)	-	-	
1	Direction of travel DOWN	Output	Port[8]	V01
2	Direction of travel UP	Output	Port[9]	V01
3	Locking solenoid	Output	Port[7]	V01
4	Evacuation on the current floor	Input	Port[0]	V01
5	Evacuation on lower floor	Input	Port[1]	V01
6	Door close button	Input/ Output	Port[2]	V01
7	PTC resistor for drive	Input	Port[3]	V02
8	Emergency call filter	Output	Port[4]	V02
9	Collective fault	Output	Port[5]	V02
10	Floor locking - floor 0	Input	-	V05
11	Floor locking - floor 1	Input	-	V05
12	Floor locking - floor 2	Input	-	V05
13	Floor locking - floor 3	Input	-	V05
14	Floor locking - floor 4	Input	-	V05
15	Floor locking - floor 5	Input	-	V05
16	Low pressure (only hydraulic)	Input	-	V06
17	Over pressure (only hydraulic)	Input	-	V06
18	Remote shutdown	Input	Port[6]	V08
19	Door end switch open (only for premium)	Input	-	V08
20	DRM special I/O port	Input	-	V08
21	Photocell test #1	Output	-	V09
22	Photocell test #2	Output	-	V09
23	Photocell test #3	Output	-	V09
24	Start inspektion	Input	-	V10
25	Monitoring brake #1	Input	-	V11
26	Monitoring brake #2	Input	-	V11
27	DICTATOR-door opener	Output	-	V11
28	Fire alarm floor 0	Input	-	V16
29	Fire alarm floor 1	Input	-	V16
30	Fire alarm floor 2	Input	-	V16
31	Fire alarm floor 3	Input	-	V16
32	Fire alarm floor 4	Input	-	V16
33	Fire alarm floor 5	Input	-	V16
34	Fire signal active	Output	-	V16
35	Remote shutdown active	Output	-	V16

Number	Function	Type	Standard port	ECO version
36	lift on the top floor	Input	-	V17

Function door open end switch

As soon as a door open end switch is programmed, the door open run time (P35) will be ignored, and the door status changes from OPENING to OPEN only when the door open end switch is activated.

Function DRM special I/O port

This input can be used to set the ECO to the fault status which can be activated for example via external circuitry or evaluation units. This state can be canceled by fault reset.

Function photocell test

The ECO basic carries out a photocell test after every stop to ensure that an interruption of the photocell really brings the home lift to a standstill. When several photocells are used (up to 3 photocell are possible), a sticking of contacts of a single photocell could remain unnoticed, in this case they can be deactivated individually to the outputs „photocell test #x“ and can be tested separately. In this way after each drive another photocell can be tested.

6 Monitoring functions of ECO

Monitoring of the shaft doors ensures that the lift is brought to a stop upon entering the shaft pit or the car roof. With automatic shaft doors (ECO premium), a monitoring contact is necessary on the emergency release for this purpose (NC normally closed). With manual swing doors, an additional release contact is required on the door lock (NO normally open). These contacts are connected individually at the control cabinet and monitored by the control software.

6.1 Description of the functions available

Main contactors monitoring

Release of the main contactors are monitored by means of series connection of break contacts. If after expiry of the monitoring time P3 monitoring input X2.8 is not activated, the control system comes to a standstill with DRM-contactor monitoring and the LED display indicates H. A reset can be performed by short press on the OK key or by switch on auxiliary mode.

Runtime monitoring

The level switch (or switches) is monitored during „deactivation“ and „activation“ on the next floor. The level switch (or switches) must switch off within 5 seconds after starting, otherwise the control system comes to a standstill with DRM zone switch and the LED display indicates L.. If the level switch (or switches) does not switch on again within runtime control P2, the control system comes to a standstill with DRM runtime and the LED display indicates R. A reset can be performed by short press on the OK key or by switch on auxiliary mode.

Shaft pit monitoring:

If the shaft door monitoring contact of the bottom floor is actuated and the car is not level with the bottom floor, the control system comes to a standstill with DRM shaft pit, the LED display indicates G.. A reset can only be performed by switching the main switch on and off.

Car roof monitoring:

If the monitoring contact of floors 1-5 is actuated and the car is not level with the respective floor or if more than one monitoring contact is actuated simultaneously, inspection operation is activated. The LED display indicates N., drives via car or landing commands are no longer possible. Manual drives with the inspection control are only possible with the flap support (temporary protected space) on the car roof folded out! A reset can only be performed by switching the main switch on and off.

Overload detection:

In the event of overload, the overload horn sounds (is actuated by overload switch) and the lift cannot move. With ECO premium, the car door is opened and held open in addition as long as the overload situation persists.

Over-temperature detection (optional):

The temperature of the drive can be monitored via an I/O port. If the over-temperature sensor trips and the lift is currently in motion, evacuation is initiated on the last floor that was passed, otherwise, the car door is opened and no drives are possible until the over-temperature sensor returns to its normal state.

Smoke/fire detection (optional):

If the smoke or fire detector trips and the left is currently in motion, evacuation is initiated on the last floor that was passed, otherwise, the car door is opened and no drives are possible until the smoke or fire detector returns to its normal state.

Smoke/fire detection dynamic (optional, from V16)

When such a fire detector is triggered (via I/O-Port or LON-Bus) a drive into the active fire detector floor is initiated. The system will wait until the fire detector returns to its normal state.

Power failure detection:

If the power supply fails and the lift is currently in motion, evacuation is initiated on the floor below the current position of the car, otherwise, the car door is opened and no drives are possible until power is restore. The evacuation drive takes place with reduced speed.

Function anti creep device

If anti-creep device time is P32>0, the K4 is used as control of anti creep device on the processor board. This means that the relay K4 is energized when the drive is started and it is released delayed after stopping. If the arrest test is triggered by button speed governor, the relay K4 is released during the drive. For anti-creep device a magnet is required whose bolt will be released by spring force in currentless state and will activate the mechanism of the speed governor.

If anti-creep device time is P32=0 (standard), the K4 is used as remote-control release on the processor board. Here the relay K4 is energized, when the button speed governor is pressed longer than 2 seconds during the drive. For remote-control release a magnet is required whose bolt will be released only when current is supplied and will activate the mechanism of the speed governor.

Lift on the top floor (optional, from V17)

The input ‚lift on the top floor‘ (#36) serves as correction of position on the top floor to prevent the lift miscounts caused by failure or bouncing at the level switch and then moves the car to the final limit switch.

For the commissioning of the lift this input must not be connected, because during commissioning the determining the number of floors is not assured. After successful commissioning it can then be connected, it should be active shortly before reaching the level position of the top floor.

6.2 Activation of individual monitoring functions

The individual monitoring functions can be switched on and off via the parameter P31. In the factory settings all monitoring functions are switched on. The activation of monitorings is bit by bit, it means that the value for parameter P31 is displayed as hex value.

The following bit values activate the corresponding monitoring functions:

Bit-0 = 0x01: Monitoring of main contactors

Bit-1 = 0x02: Monitoring of intermittent brake via K3 (evacuation)

Bit-2 = 0x04: Monitoring of the safety circuit

Bit-3 = 0x08: Monitoring photocell with ECO basic

Bit-4 = 0x10: Monitoring of correction switch (BC)

Bit-5 = 0x20: Monitoring level switch BU1/BU2

Bit-6 = 0x40: Monitoring of shaft doors

Bit-7 = 0x80: reserve

7 Activation of special options

These special options are switched on bit by bit. Special options can be activated via parameter P33.

Bit-0 = 0x01: overload signal via emergency call horn (factory setting)

Bit-1 = 0x02: SHK-interruption clears all calls (from version V15)

Bit-2 = 0x04: At the first level switch to slow speed (from version V18)

Bit-3 = 0x08: reserve

Bit-4 = 0x10: reserve

Bit-5 = 0x20: reserve

Bit-6 = 0x40: reserve

Bit-7 = 0x80: reserve

Notes

NEW *LIFT*

NEUE ELEKTRONISCHE WEGE

NEW *LIFT* Service Center GmbH
Ruwerstraße 16
54427 Kell am See

Tel +49 6589 – 919 540
Fax +49 6589 – 919 540 – 300
E-Mail info@newlift-sc.de

www.newlift.de